Energie. Zuverlässig. Messen.

Low-Power Current Transformer

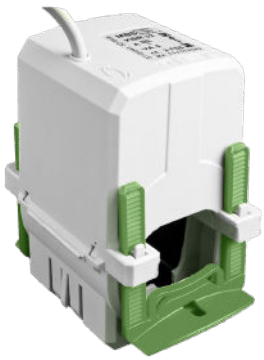

Our Product Ranges

Low-Power current transformers for industrial applications from page 14
Accuracy class 1 and 0,5

KSR - Low-Power CT **from page 14**

Bus bar 1:	Bus bar 2:	Diameter:	Width:	Current range:	Type:	Page:
-	-	14 mm	45 mm	40 ... 150 A	KSR 14.3	Page 15
-	-	21 mm	45 mm	50 ... 300 A	KSR 20.3	Page 16
-	-	21 mm	44 mm		KSR 201.3	Page 17
-	-	22,8 mm	49,5 mm	100 ... 500 A	KSR 21.3	Page 18
-	-	21,2 mm	50 mm	50 ... 600 A	KSR 21.5	Page 19
-	-	22,5 mm	61 mm	50 ... 600 A	KSR 22.3	Page 20

KSS - Plug-in current transformer for fuse switch disconnectors, type SlimLine of size XR1 **from page 21**

Bus bar 1:	Bus bar 2:	Diameter:	Width:	Current range:	Type:	Page:
17 x 6 mm	-	15,2 mm	45 mm	75 ... 250 A	KSS 176.3	Page 22

KSK - Low-Power CT **from page 23**

Bus bar 1:	Bus bar 2:	Diameter:	Width:	Current range:	Type:	Page:
17 x 6 mm	-	15,2 mm	45 mm	75 ... 250 A	KSK 176.3	Page 27
20 x 5 mm	-	17,5 mm	49,5 mm	60 ... 400 A	KSK 205.3	Page 28
20 x 10 mm	-	19,2 mm	61 mm	50 ... 500 A	KSK 21.3	Page 29
20 x 10 mm	-	20 mm	71 mm	40 ... 500 A	KSK 421.4	Page 30
30 x 10 mm	-	28 mm	50 mm	60 ... 500 A	KSK 231.5	Page 31
30 x 10 mm	2x 20 x 10 mm	26 mm	61 mm	50 ... 750 A	KSK 31.3	Page 32
30 x 10 mm	2x 20 x 10 mm	28 mm	61 mm	50 ... 750 A	KSK 31.4	Page 33
30 x 10 mm	2x 20 x 10 mm	28 mm	61 mm	40 ... 750 A	KSK 31.5	Page 34
31 x 18 mm	-	26 mm	61 mm	60 ... 600 A	KSK 318.3	Page 35
40 x 10 mm	2x 30 x 5 mm	32 mm	71 mm	50 ... 1000 A	KSK 41.4	Page 36
40 x 10 mm	2x 30 x 5 mm	32 mm	86 mm	30 ... 750 A	KSK 541.4	Page 37
40 x 10 mm	2x 30 x 5 mm	32 mm	71 mm	60 ... 1000 A	KSK 41.5	Page 38
40 x 12 mm	32 x 18 mm	26 mm	61 mm	100 ... 750 A	KSK 41.3	Page 39
40 x 12 mm	30 x 15 mm	30,5 mm	71 mm	50 ... 800 A	KSK 412.4	Page 40
50 x 12 mm	2x 40 x 10 mm	44 mm	86 mm	100 ... 1250 A	KSK 51.4	Page 41
60 x 10 mm	2x 50 x 10 mm	44 mm	86 mm	200 ... 1250 A	KSK 561.4	Page 42
63 x 10 mm	2x 50 x 10 mm	44 mm	96 mm	200 ... 1200 A	KSK 61.4	Page 43
60 x 30 mm	50 x 40 mm	44 mm	96 mm	300 ... 1600 A	KSK 63.4	Page 44
60 x 30 mm	-	30 mm	88 mm	200 ... 2000 A	KSK 63.6	Page 45
80 x 10 mm	2x 60 x 10 mm	55 mm	120 mm	400 ... 2000 A	KSK 81.4	Page 46
84 x 84 mm		34 mm	96 mm	300 ... 2000 A	KSK 83.4	Page 47
100 x 10 mm	2x 80 x 10 mm	70 mm	130 mm	500 ... 2000 A	KSK 101.4	Page 49
2x 100 x 10 mm	3x 80 x 10 mm	85 mm	172 mm	750 ... 3000 A	KSK 103.3	Page 50
100 x 56 mm	-	-	129 mm	400 ... 4000 A	KSK 105.3	Page 51
100 x 55 mm	-	55 mm	129 mm	600 ... 3000 A	KSK 105.6	Page 52
100 x 55 mm	-	55 mm	129 mm	2500 ... 3000 A	KSK 105.6N	Page 53
123 x 30 mm	3x 100 x 10 mm	100 mm	172 mm	750 ... 3000 A	KSK 123.3	Page 54
127 x 71 mm		-	159 mm	400 ... 4000 A	KSK 127.3	Page 55
120 x 70 mm	-	70 mm	159 mm	1000 ... 2500 A	KSK 127.4	Page 56
120 x 70 mm	-	70 mm	205 mm	1000 ... 6000 A	KSK 127.6	Page 57
120 x 90 mm	-	90 mm	250 mm	1000 ... 7500 A	KSK 129.10	Page 58

Our Product Ranges

Low-voltage current transformers for industrial applications with screwless connection technology, Cage Clamp® from page 59
Accuracy class 1 and 0,5

CTB - Plug-in current transformer with screwless connection technology Cage Clamp®, UL certi. **from page 59**

Bus bar 1:	Bus bar 2:	Diameter:	Width:	Current range:	Type:	Page:
30 x 10 mm	25 x 12 mm	25,7 mm	60 mm	50 ... 750 A	CTB 31.35	Page 61
40 x 10 mm	30 x 15 mm	31,8 mm	70 mm	75 ... 1000 A	CTB 41.35	Page 62
50 x 12 mm	40 x 30 mm	43,7 mm	85 mm	100 ... 1250 A	CTB 51.35	Page 63
63 x 10 mm	50 x 30 mm	43,7 mm	95 mm	200 ... 1600 A	CTB 61.35	Page 64
80 x 10 mm	60 x 30 mm	54,7 mm	120 mm	400 ... 2000 A	CTB 81.35	Page 65
100 x 10 mm	80 x 30 mm	70 mm	130 mm	400 .... 2500 A	CTB 101.35	Page 66

Low-voltage current transformers for industrial applications from page 67
Accuracy class 1 and 0,5

KSW - Low-Power CT **from page 67**

Bus bar 1:	Bus bar 2:	Diameter:	Width:	Current range:	Type:	Page:
-	-	-	61 mm	1 ... 20 A	KSW 30	Page 69
-	-	-	71 mm	1 ... 30 A	KSW 40	Page 70
-	-	-	71 mm	30 ... 50 A	KSW 40N	Page 71

Low-voltage current transformers for industrial applications from page 72
Accuracy class 1 and 0,5

KBR - Split-core current transformer designed for usage around isolated primary conductors **from page 72**

Bus bar 1:	Bus bar 2:	Diameter:	Width:	Current range:	Type:	Page:
-	-	18,5	36 mm	60 ... 250 A	KBR 18	Page 73
-	-	32,5 mm	59,2 mm	100 ... 600 A	KBR 32	Page 74
-	-	44 mm	72,2 mm	250 ... 1000 A	KBR 44	Page 75

KSKBU - Cable conversion current transformer **from page 77**

Bus bar 1:	Bus bar 2:	Diameter:	Width:	Current range:	Type:	Page:
20 x 30 cm	-	20 mm	93 mm	100 ... 400 A	KSKBU 23	Page 78
50 x 80 cm	-	50 mm	125 mm	250 ... 1000 A	KSKBU 58	Page 79
80 x 120 cm	-	80 mm	155 mm	250 ... 1500 A	KSKBU 812	Page 80
80 x 160 cm	-	80 mm	195 mm	1000 ... 5000 A	KSKBU 816	Page 81

KSKSU / KSSUSK - Summation current transformer **from page 82**

Inputs	Bus bar 2:	Diameter:	Width:	Current range:	Type:	Page:
2 ... 3 Stk.		-	127 mm	1 A or 5 A	KSKSU	Page 85
3 ... 8 Stk.		-	156 mm	1 A or 5 A	KSSUSK	Page 86

CTM 7 - Mini current transformers **from page 87**

Bus bar 1:	Bus bar 2:	Diameter:	Width:	Current range:	Type:	Page:
-	-	7,6 mm	27,5 mm	7 ... 25 A	CTM 7	Page 88

Quick Connect - Three-phase current transformer set with innovative connection technology to measuring unit **from p. 89**

Bus bar 1:	Bus bar 2:	Diameter:	Width:	Current range:	Type:	Page:
3x 21 x 25 mm	-	21 mm	110,5 mm	3x 60 ... 3x 250 A	ASKDS 25	Page 91
3x 30 x 29 mm	-	29 mm	140 mm	3x 250 ... 3x 600 A	ASKDS 33	Page 91
3x 50 x 54 mm	-	50 mm	215 mm	3x 750 ... 3x 1250 A	ASKDS 55	Page 91

All information in this catalogue are without obligation and not-binding. We assume no liability for printing errors.
With appearance of this catalogue all previous have lost their validity.

Our general terms and conditions of business can be found on our website www.mbs-ag.com.

Low-power current transformers with voltage output

Unlike conventional current transformers with 1 or 5 A, secondary output signal give to current sensors an output voltage signal.

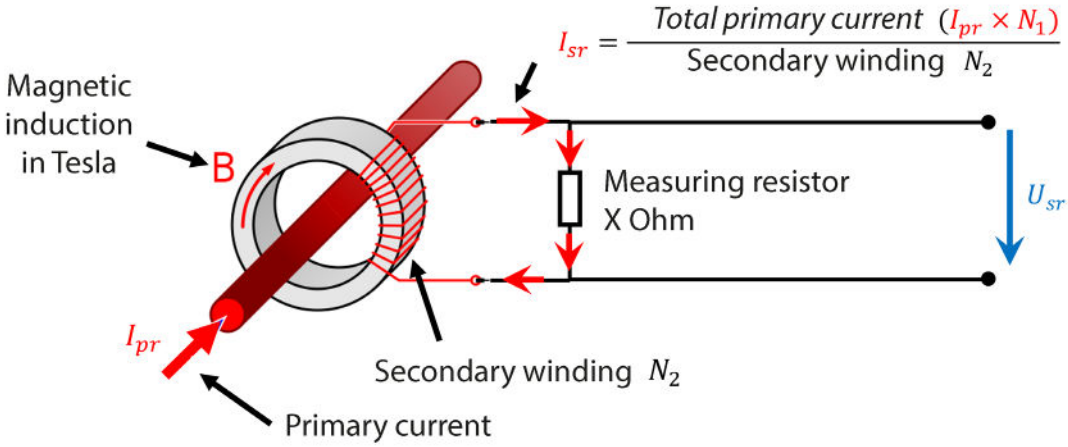

Figure 1: Principle of the low-power current transformer

As can be seen in the illustration, a conventional current transformer is loaded with a measuring resistor in the housing. In most cases, the resistor value is between 0.5 and 5 ohms and converts the current signal into a voltage signal. According to international standardisation, 22.5 mV, 150 mV and 225 mV are specified for the output voltage. In addition to these values, the value 333 mV has also become established on the market.

Low-power transformers are currently not approved for offsetting measurements, so they are usually connected to universal measuring devices with voltage input channels. The impedance of these input channels can be described as high-impedance and is usually well above 10 kOhm, so that only a very small proportion of the secondary current Isr flows through the resistance of the measuring device. The measuring accuracy of the current sensor is therefore not significantly influenced by the measuring device and the supply line. An exact burden determination as with conventional current transformers can be omitted. Over- or under-burdening is ruled out. At the same time, dangerous open-circuit voltages are no longer possible due to the low-resistance loading in the transformer housing at the secondary terminals.

The primary and secondary connections are also labelled as for current transformers.

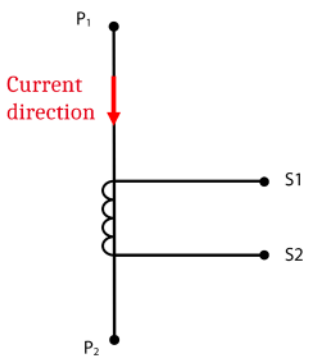

Figure 2: Terminal designations of the low-power current transformers

As with current transformers, these are passive transformers that do not require an additional power supply. The general normative requirements for these devices are currently defined in the following international standard:

IEC 61869-10: Instrument transformers - Additional requirements for low-power current transformers

The accuracy classes are defined similarly to the familiar current transformer classes. The following diagram shows the percentage amplitude errors of the accuracy classes up to class 1.

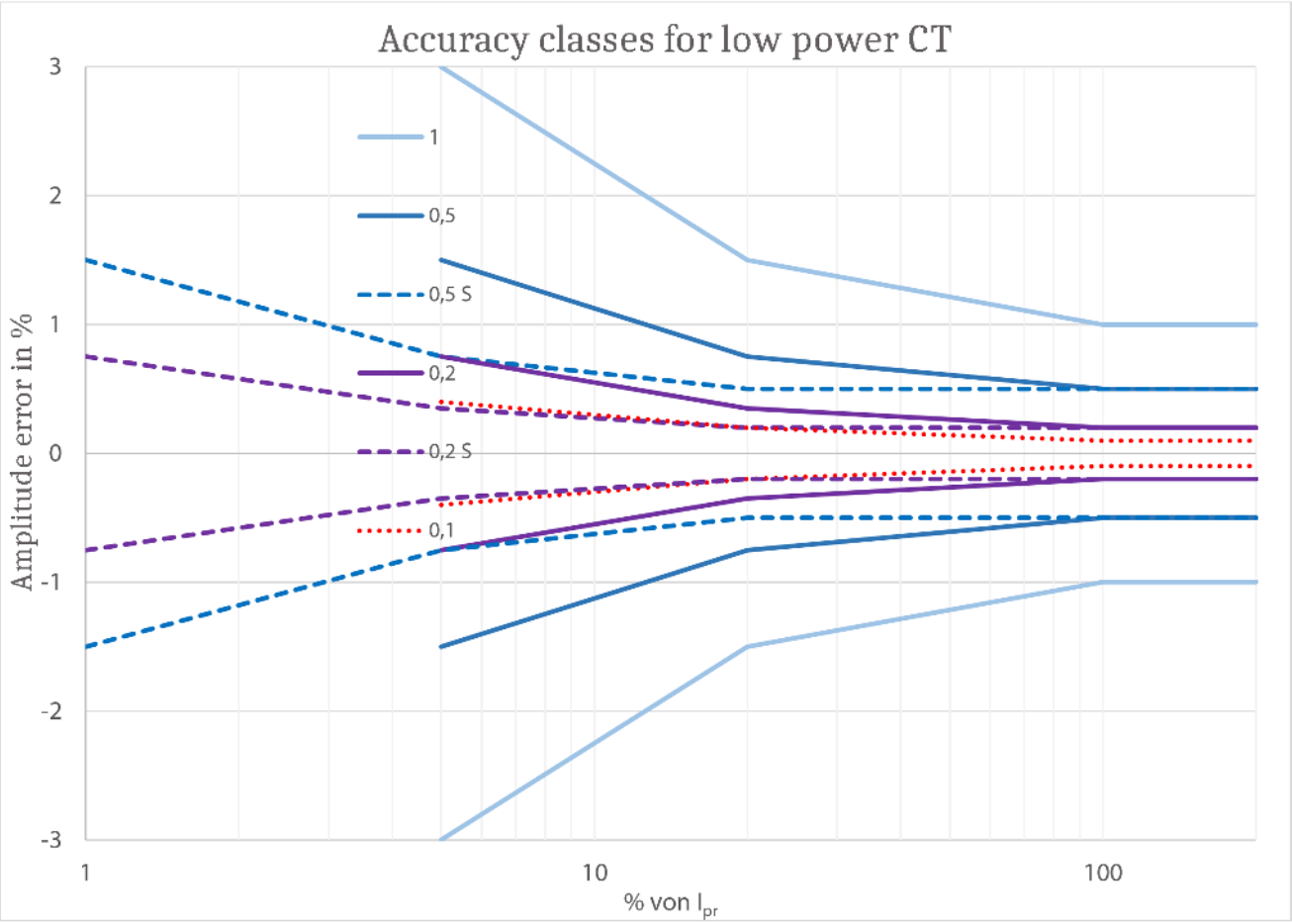

Figure 3: Accuracy classes for low-power current transformers

As the sensors are often connected to universal measuring devices that have a larger analogue bandwidth than meters, MBS low-power current transformers generally meet the requirements of class WB1 in accordance with IEC 61869-1. Here, a defined accuracy is defined as follows depending on the accuracy class up to 3 kHz.

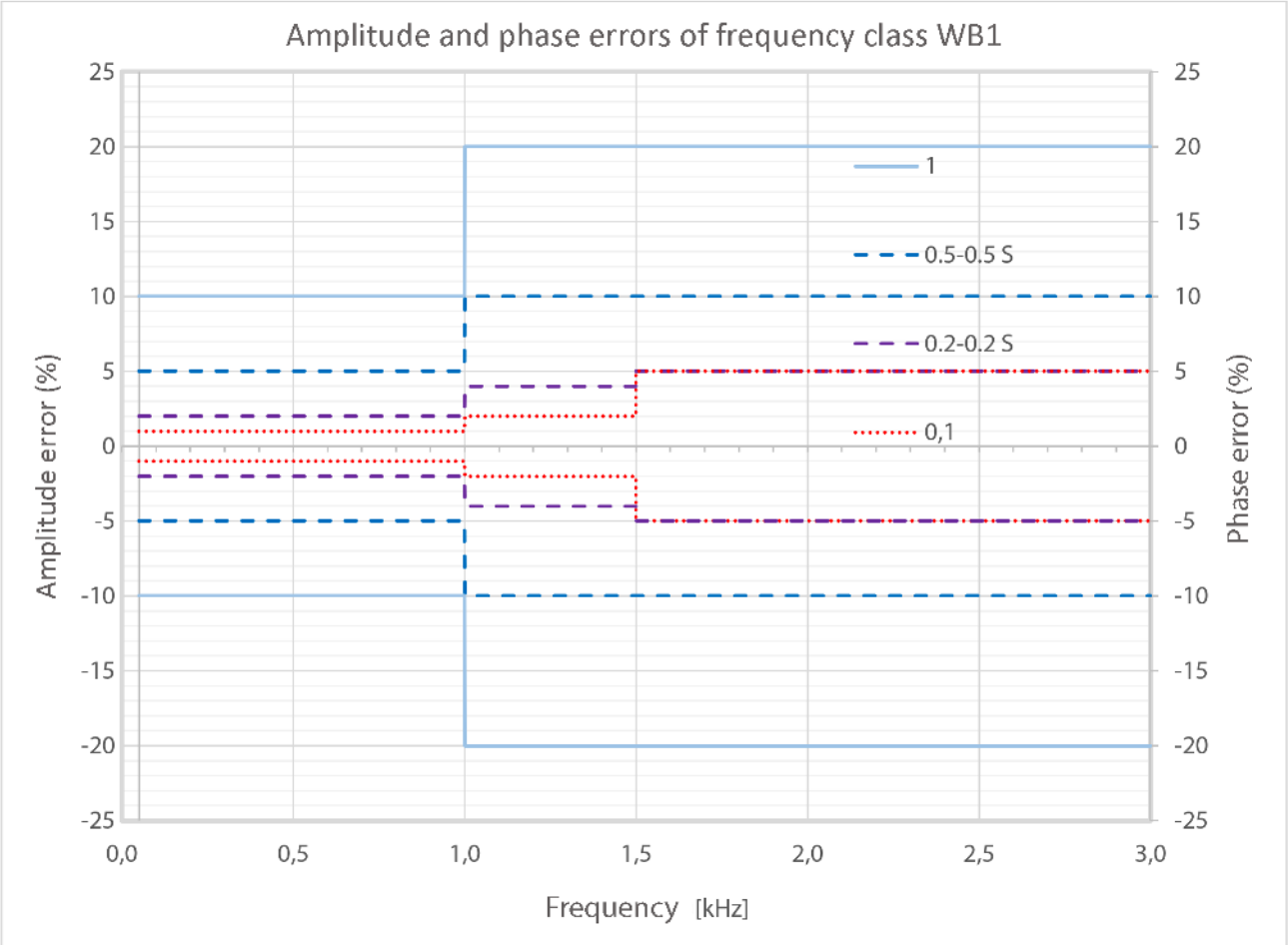

Figure 4: Amplitude and phase errors of frequency class WB1

Current transformers – Technical Characteristics

Current transformers are special transformers for the proportional transformation of currents of larger current forces into direct measurable smaller values. Due to their constructive design as well as their physical operating principle a true galvanic separation between primary circuit and measuring circuit is achieved.

Primary rated current — Value of the primary current which marks the current transformer and for which it is rated.

Secondary rated current — Value of the secondary current which marks the current transformer and for which it is rated.

Rated Power — Value of the apparent power (in a VA) specified power factor which the current transformer is intended to supply to the secondary circuit at the secondary rated current and rated burden.

Measuring ratio — Ratio of the primary rated current to the secondary rated current.
The actual measuring ratio of a current transformer is specified as an unbridged break.

Burden — Impedance of the secondary circuit expressed in Ohm with data of the power factor.

Rated burden — Value of the burden upon which the accurate requirements of the current transformer are based.

Rated frequency — Value of the frequency upon which the calculation of the current transformer is dependent.

Accuracy class — Declaration of a current transformer that its measuring deviation are governed within specified rules.

Phase displacement error [δ] — Phase shift difference between the primary and secondary current. The direction of the indicator is such that with an ideal current transformer the phase displacement is equal to zero.

Current deviation — Measurement deviation which a current transformer causes, when measuring a current, and the result hereby created, that the actual ratio deviates from the rated measuring ratio. The current error expressed in percentage is calculated according to the following rule:

$$F_i\,[\%] = \frac{(K_n\, I_s - I_p)\ \text{x}\ 100}{I_p}$$

F_i = current error deviation in %
K_n = nominal transformation ratio
I_p = actual primary current
I_s = actual secondary current if I_p low under measurement conditions

Maximum voltage for electrical equipment U_m — Effective value of the max. phase-phase-voltage for which a current transformer is measured, with a view of its isolation.

Total measuring deviation

In the stationary position the effective value of the difference between:
a) The momentary value of the primary current and
b) The momentary values of the rated measuring ratio multiplied by the actual secondary current whereby the positive symptoms of the primary and secondary currents correspond to the reconciliation for the connection denutation
The total deviation F_G is generally calculated in percentage of the effective value of the primary current as follows F_G:

$$F_g = \frac{100}{I_p} \times \sqrt{\frac{1}{T} \times \int_0^T (K_n\, i_s - i_p)^2\, dt}$$

K_n = Rated measuring ratio
I_p = Effective value of the primary current
i_p = Momentary value of the primary current
i_s = Momentary value of the secondary current
T = Period duration

Rated-/current limit [I_{pl}]

Value of the lowest primary current whereby the secondary rated burden of the total deviation of the current transformer is equal or larger than 10 %.

Over current-/limit factor (FS)

Ratio of the limited current to the primary rated current.

Thermal nominal rated continuous current [I_{cth}]

Value of the current in the primary winding, the excess temperature adhere to the norm value and the secondary winding is loaded with the rated burden.

Thermal rated short time current [I_{th}]

Effective value of the primary current which the current transformer can hold for 1 second w/o damage with short circuited secondary winding.

Rated surge current [I_{dyn}]

Peak value of the primary current, whose electro-mechanical impact is resisted by the current transformer with short circuited secondary winding without electrical and mechanical damage.

"Open circuit voltage" of current transformers

Current transformers which are not switched directly to a consumer have to be secondarily short circuited to conform with safety standards.
A secondary open operated current transformer induces on its secondary terminals very high peak voltages. The combined amounts of these voltages can reach values of some kilovolt and, dependent on the dimension of the current transformer, result a hazard for people and prevent the continuous trouble free operation of the transformer. For safety reasons and to eliminate the iron core being magnetized in a secondary operated open operation, an open operation should be discouraged.

Earthing of secondary terminals

According to DIN VDE 0141 (01/2000) paragraph 5.3.4, the current- and voltage transformers for rated voltages from U_m = 3.6 kV are to be secondarily earthed. At low voltage (U_m % 1.2 kV) earthing is not required as long as the transformer housings are compact and do not have exposed metal surface.

Primary bus bar cross sections

The geometric dimension of the primary conductor aperture of our current transformers are only limited for the actual interpretation of the nominal current range. In the range of the primary conductor, the total bus bar cross section of the current transformer can be calculated fractually smaller, provided it is ensured that the excess temperature is absorbed via the connection cross section of the bordering bus bar.

Special configurations

– Saturation current transformers	on request
– Current transformers for tropical application	on request
– Primary nominal currents deviating from prefered values	on request
– Deviating rated frequencies (16 $^2/_3$ up to 400 Hz)	on request
– Transformers for higher mechanical load capacity (vibration protection)	on request

Design of MBS low-voltage current transformers

The current transformers have the following characteristics:

- Break-proof plastic casing
- Black polycarbonate
- Low flammability
- Self-extinguishing
- Ultrasonically welded transformer casing
- Nickel-plated secondary terminals with nickel-plated plus/minus screw M 5 x 8 mm
- Integrated secondary cover flap
- Connection cross section: max. 4 mm^2 with ferrule, 6 mm^2 solid.

Foot angle and rail fastening screws with protective insulating cap (contact protection) are included in the scope of delivery. All transformers are suitable both for use on solid primary conductors and on flexible, insulated copper strip.

Isolation protection cap

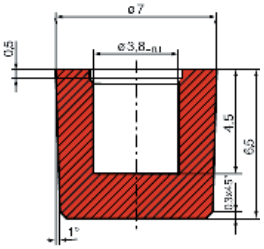

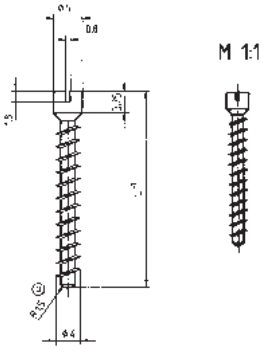

Bus bar mounting screw, screw length (L) 25, 32, 36, 46, 54, 80 mm, torque 0,5 Nm

General technical information:

Rated frequency	50(60)Hz (16 2/3 up to 400 Hz upon request)
Maximum voltage for electrical equipment	U_m % 0,72 kV
Isolation class	E
Isolation testing voltage	3 kV, 1 min, Ueff, 50 Hz (U_m % 0,72 kV) 6 kV, 1 min, Ueff, 50 Hz (U_m % 1,2 kV)
Thermal nominal continuous rated current	I_{cth} = 1,0 x I_n (higher values upon request) I_{cth} = 1,2 x I_n (KSB, KSK 165.5, KSK 205.5)
Thermal rated short time current	I_{th} = 5 x I_n, 5sek (max. 100 kA) (Types KSR, KSK, KSW, KBU, KBR, KSKSU)
Ratio surge current	I_{dyn} = 2,0 x I_{th}
Over current-/limit factor	FS 5 to FS 15 (exact specification, on the name plate)
Working temperature range	–5 °C ≤ ϑ ≤ +50 °C
Storage temperature range	–25 °C ≤ ϑ ≤ +70 °C
Applied norms	DIN EN 61869/1 DIN EN 61869-6 DIN EN 61869-10

Operating instructions

The installation of current transformers and the locked measuring appliancer is only allowed if the unit is without voltage! The wirering of the current transformers follows under using the following junction diagramms.
While using the current transformer with opened secondary circuit there may be dangerous voltages for man at the secondary connections. An opened using of the secondary circuit of current transformers is therefore not allowed! Before an exchange of measure appliancer in the secondary circuit of the current transformer there must be a short-circuit on his secondary connections.

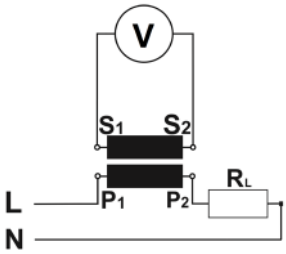

Measuring circuit

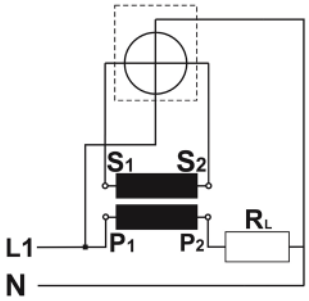

Single-phase meter circuit

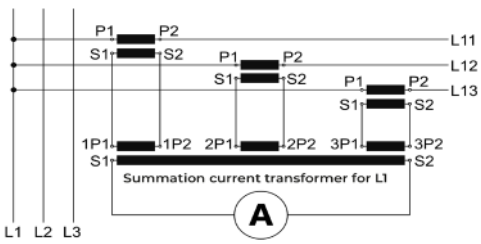

Summation converter circuit

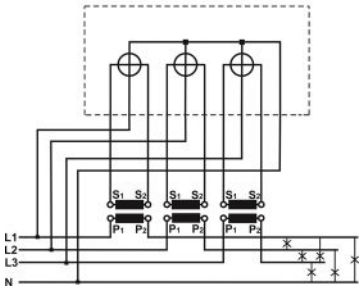

Multiphase meter circuit

Error limit values of classes 0.2 … 3 according to DIN IEC 61869/2

Accuracy class	Current error $\pm\Delta_F$ at					Phase displacement error $\pm\Delta_F$ at				
	1,2 I_n 1,0 I_n	0,2 I_n	0,1 I_n	0,05 I_n	0,01 I_n	1,2 I_n 1,0 I_n	0,2 I_n	0,1 I_n	0,05 I_n	0,01 I_n
	%	%	%	%	%	min	min	min	min	min
0,2	0,2	0,35		0,75		10	15		30	
0,2s	0,2	0,2		0,35	0,75	10	10		15	30
0,5	0,5	0,75		1,5		30	45		90	
0,5s	0,5	0,5		0,75	1,5	30	30		45	90
1	1	1,5		3		60	90		180	
3	3*									

* at 0,5 I_n and thermal nominal continuous current

Permissible current of copper busbar according to DIN 43671

Bus bar cross section	1 bus bar	2 bus bars	3 bus bars
20 x 10	427 A	825 A	1180 A
30 x 05	379 A	672 A	896 A
30 x 10	573 A	1060 A	1480 A
40 x 05	482 A	836 A	1090 A
40 x 10	715 A	1290 A	1770 A
50 x 10	852 A	1510 A	2040 A
60 x 10	985 A	1720 A	2300 A
80 x 10	1240 A	2110 A	2790 A
100 x 10	1490 A	2480 A	3260 A
Bus bar surface			

The above values apply to continuous current load at approx. 30 °C ambient temperature.

Designations of the current transformers' connection terminals

The connections of all primary windings are marked with capital letters „P_1" and „P_2", the connections of all secondary windings are marked with the corresponding lower case letters „s_1" and „s_2".
By current transformers with a multiple secondary tappings the winding end is marked "l" followed by the prefix „l_1", the tappings with a decreasing number of windings are sequentially numbered to "2"; "3" etc.

By summation current transformers with a multiple of indipendent primary windings, the terminals of the individual windings are distinguishable from the terminal details "K" or "L" set before the capital letters "A", "B", "C".
By summation current transformers which are for the connection of different main transformers, the connection of the main transformer with the highest ratio transmission is made to the lowest terminal pair ("AK"-"AL"). The correct order of connection can also be seen from the name plate which bears an information of the individual nominal currents.

Example:

Main current transformer 1: 300/5A
Main current transformer 2: 150/5A -> Information on the name plate: $\mathbf{6_A : 3_B : 2_C}$
Main current transformer 3: 100/5A

Error curves of low voltage current transformers

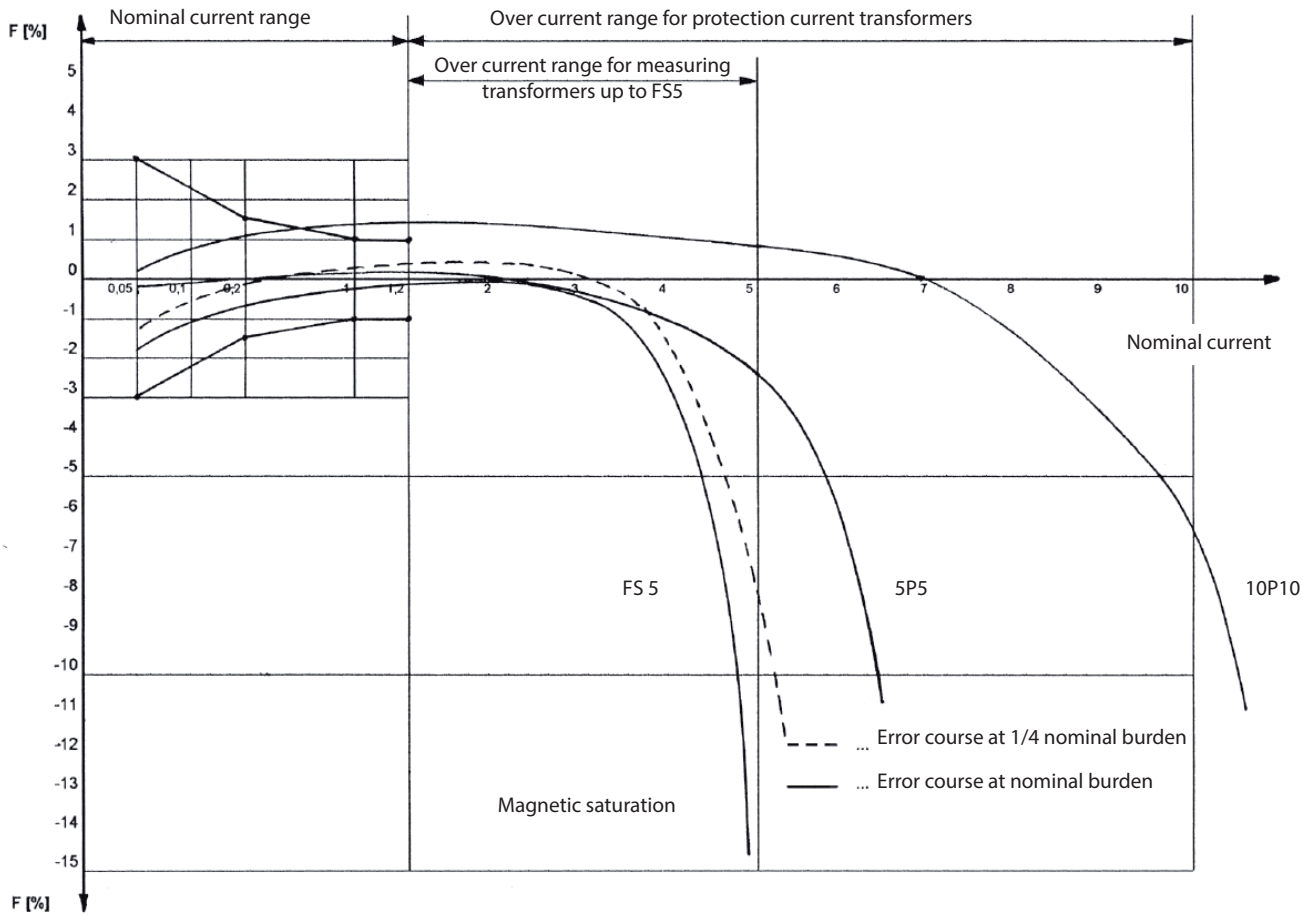

Power requirements of measuring devices and relays

By application of current transformers, two main demands will be requested from the user:

– high degree of measuring precision in the nominal current range
– protection function in the over current range

In order to fulfill these demands it is necessary that the assumed nominal power of a current transformer is adapted to the actual power requirements of the measuring conductor. When establishing the actual power requirement, consideration has to be given not only to power losses of units to be connected, but also to the losses of the measuring conductors.

For the realization of the demands it is necessary that the assumed nominal power of the current transformer is largely adapted to the actual power requirements of the measuring set up. For the appraisal of the actual power requirements, apart of the own power consumption requirements of the connected measuring units, also the conductor losses must be considered which are connected to the secondary circuit of the transformer measuring conductors.

Own Power consumption requirement of typical measuring units

Current meter soft iron up to 100 mm Ø		0,700	–	1,5 VA
Rectifier current meter		0,001	–	0,25 VA
Multi range current meter		0,005	–	5,0 VA
Current recorder		0,300	–	9,0 VA
Bimetal-current meter		2,500	–	3,0 VA
Power factor meter		0,200	–	5,0 VA
Power factor recorder		3,000	–	12,0 VA
Power factor meter		2,000	–	6,0 VA
Power factor recorder		9,000	–	16,0 VA
Meter		0,400	–	1,0 VA
Relay	N-Relay			14,0 VA
	Over current-Relay	0,200	–	6,0 VA
	Over current time-Relay	3,000	–	6,0 VA
	Direction-Relay		–	10,0 VA
	Bimetal-Relay	7,000	–	11,0 VA
	Distance-Relay	1,000	–	30,0 VA
	Differential-Relay	0,200	–	2,0 VA
		1,000		15,0 VA
Current transformer trip switch		5,000	–	150,0 VA
Controler		5,000	–	180,0 VA

Low-voltage current transformers for industrial applications

KSR 14.3	Round conductor: 14 mm Transformer width: 45 mm	Current range: 30 ... 150 A	Page: 15
KSR 20.3	Round conductor: 21 mm Transformer width: 45 mm	Current range: 50 ... 300 A	Page: 16
KSR 201.3	Round conductor: 21 mm Transformer width: 44 mm	Current range: 60 ... 300 A	Page: 17
KSR 21.3	Round conductor: 22,8 mm Transformer width: 49,5 mm	Current range: 100 ... 500 A	Page: 18
KSR 21.5	Round conductor: 21,2 mm Transformer width: 50 mm	Current range: 50 ... 600 A	Page: 19
KSR 22.3	Round conductor: 22,5 mm Transformer width: 61 mm	Current range: 50 ... 600 A	Page: 20

KSR 14.3

Low-Power CT

Current transformer designed for integrated installation into fuse switch disconnectors, type SlimeLine of size XR00.

	Secondary current / Class		
Primary current [A]	333 mV Cl. 3 Art.-no.	333 mV Cl. 1 Art.-no	333 mV Cl. 0,5 Art.-no.
30	143-9001		
40	143-9002		143-8001
50		143-9003	143-8003
60		143-9004	
75		143-9005	143-8005
100		143-9006	
125		143-9007	
150		143-9008	

Round conductor	14 mm
Transformer width	45 mm
Height	65 mm
Depth	30 mm

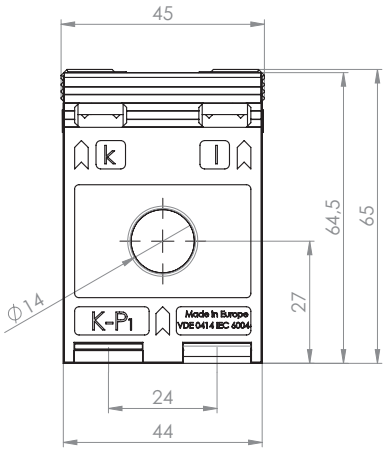

		Art.-no.
	Snap-on mounting, type E	**55013**
	Sealed shutter	**–**

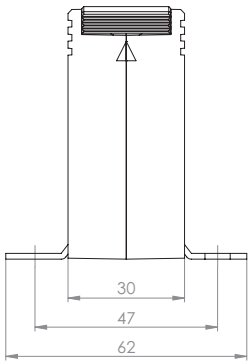

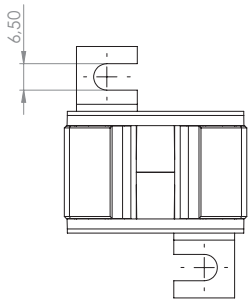

Other output signals like 22.5 mV, 150 mV, 225 mV on demand.
Class 0.5, 0.5s, 0.2, 0.2s on request.

KSR 20.3

Low-Power CT

Current transformer designed for integrated installation into fuse switch disconnectors, type SlimeLine of size XR00/1.

	Secondary current / Class	
Primary current [A]	333 mV Cl. 1 Art.-no.	333 mV Cl. 0,5 Art.-no.
50	203-9001	
60	203-9002	
75	203-9003	
80	203-9004	
100	203-9005	203-8005
125	203-9006	
150	203-9007	
200	203-9008	
250	203-9009	
300	203-9010	

		Art.-no.
	Snap-on mounting, type E	**55013**
	Sealed shutter	**–**

Round conductor	21 mm
Transformer width	45 mm
Height	65 mm
Depth	30 mm

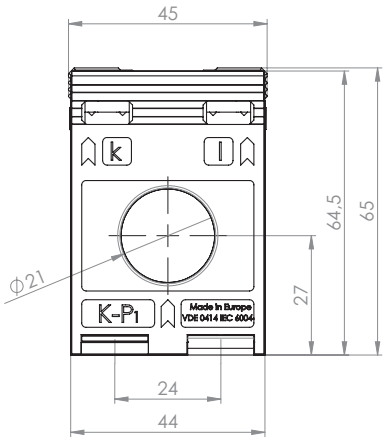

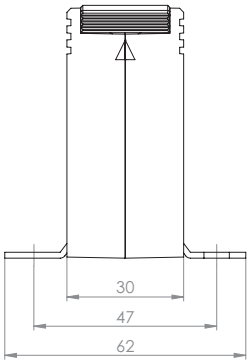

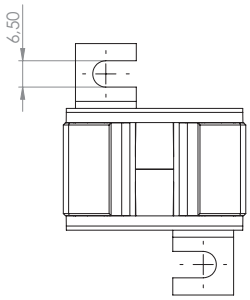

Other output signals like 22.5 mV, 150 mV, 225 mV on demand.
Class 0.5, 0.5s, 0.2, 0.2s on request.

KSR 201.3

Low-Power CT

Round conductor	21 mm
Transformer width	44 mm
Height	64,5 mm
Depth	30 mm

	Secondary current / Class
Primary current [A]	333 mV Cl. 1 Art.-no.
60	2013-9001
75	2013-9002
80	2013-9003
100	2013-9004
125	2013-9005
150	2013-9006
200	2013-9007
250	2013-9008
300	2013-9009

		Art.-no.
	Snap-on mounting, type E	**55013**
	Sealed shutter	**–**

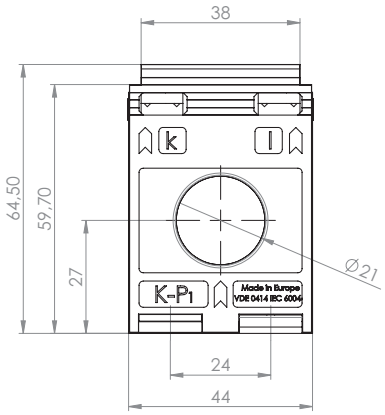

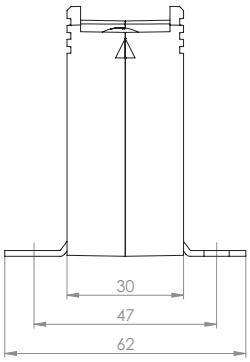

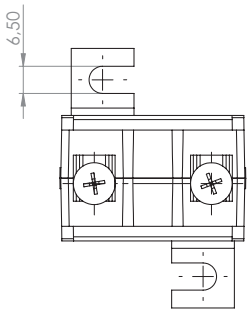

Other output signals like 22.5 mV, 150 mV, 225 mV on demand.
Class 0.5, 0.5s, 0.2, 0.2s on request.

KSR 21.3

Low-Power CT

Round conductor	22,8 mm
Transformer width	49,5 mm
Height	65 mm
Depth	35 mm

	Secondary current / Class
Primary current [A]	333 mV Cl. 1 Art.-no.
100	213-9001
150	213-9002
200	213-9003
250	213-9004
300	213-9005
400	213-9006
500	213-9007

		Art.-no.
	Snap-on mounting, type F	**55014**
	Sealed shutter	**–**

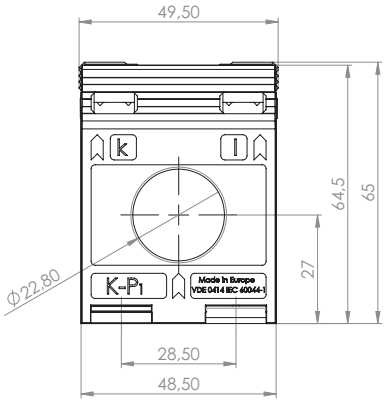

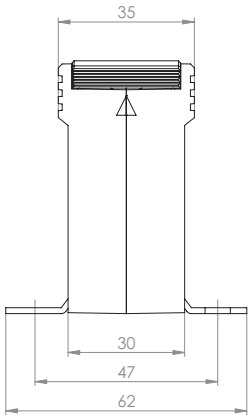

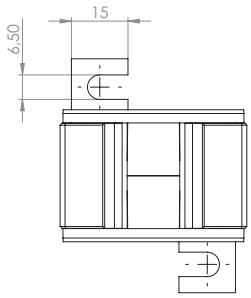

Other output signals like 22.5 mV, 150 mV, 225 mV on demand.
Class 0.5, 0.5s, 0.2, 0.2s on request.

KSR 21.5

Low-Power CT

Round conductor	21,2 mm
Transformer width	49,9 mm
Height	70 mm
Depth	55 mm

	Secondary current / Class
Primary current [A]	333 mV Cl. 1 Art.-no.
50	215-9001
60	215-9002
75	215-9003
80	215-9004
100	215-9005
125	215-9006
150	215-9007
200	215-9008
250	215-9009
300	215-9010
400	215-9011
500	215-9012
600	215-9013

		Art.-no.
	Snap-on mounting	–
	Sealed shutter	–

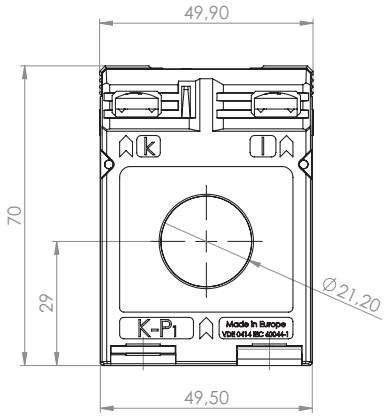

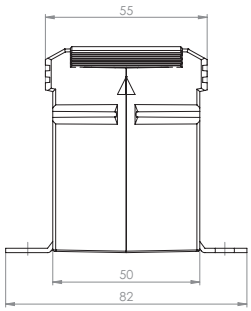

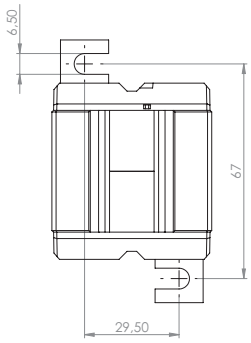

Other output signals like 22.5 mV, 150 mV, 225 mV on demand.
Class 0.5, 0.5s, 0.2, 0.2s on request.

KSR 22.3

Low-Power CT

Round conductor	22,5 mm
Transformer width	61 mm
Height	75,5 mm
Depth	35 mm

	Secondary current / Class
Primary current [A]	333 mV Cl. 1 Art.-no.
50	223-9001
60	223-9002
75	223-9003
80	223-9004
100	223-9005
150	223-9006
200	223-9007
250	223-9008
300	223-9009
400	223-9010
500	223-9011
600	223-9012

		Art.-no.
	Snap-on mounting, type A	**53011**
	Sealed shutter, type A	**59040**

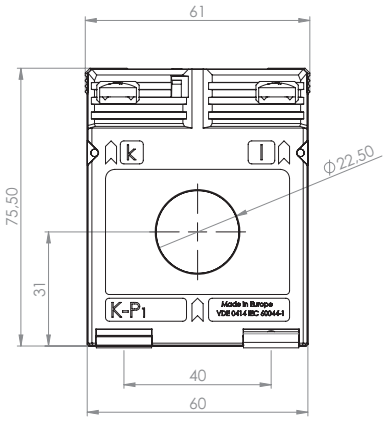

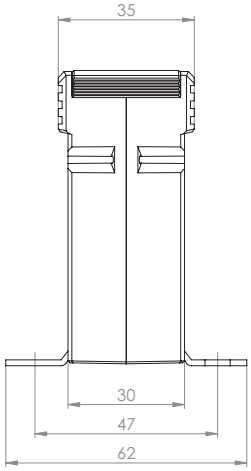

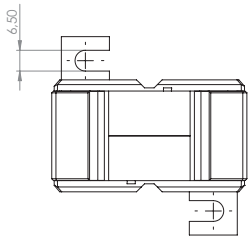

Other output signals like 22.5 mV, 150 mV, 225 mV on demand.
Class 0.5, 0.5s, 0.2, 0.2s on request.

Low-voltage current transformers for industrial applications

KSS 176.3 **SlimLine, size XR1**	Round conductor: 15,2 mm Current range: 75 ... 250 A Transformer width: 45 mm	Page: 22

KSS 176.3

Low-Power CT

Current transformer designed for integrated installation into fuse switch disconnectors, type SlimeLine of size XR1.

	Secondary current / Class
Primary current [A]	333 mV Cl. 1 Art.-no.
75	1763-9001
80	1763-9002
100	1763-9003
125	1763-9004
150	1763-9005
160	1763-9006
200	1763-9007
250	1763-9008

		Art.-no.
	Snap-on mounting, type E	**55013**
	Sealed shutter	**–**

Bus bar 1	17 x 6 mm
Round conductor	15,2 mm
Transformer width	45 mm
Height	65 mm
Depth	30 mm

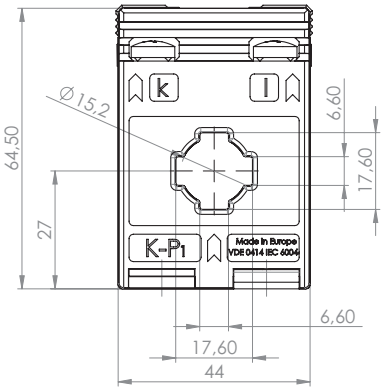

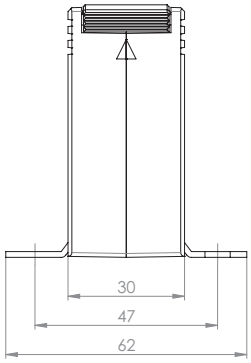

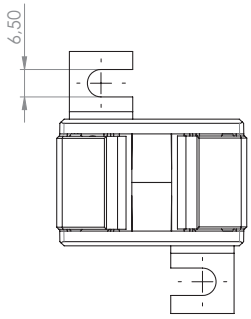

Other output signals like 22.5 mV, 150 mV, 225 mV on demand.
Class 0.5, 0.5s, 0.2, 0.2s on request.

Low-voltage current transformers for industrial applications

KSK 176.3	Bus bar 1: 17 x 6 mm Round conductor: 15,2 mm Transformer width: 45 mm	Current range: 75 ... 250 A	Page: 27
KSK 205.3	Bus bar 1: 20 x 5 mm Round conductor: 17,5 mm Transformer width: 49,5 mm	Current range: 60 ... 400 A	Page: 28
KSK 21.3	Bus bar 1: 20 x 10 mm Round conductor: 19,2 mm Transformer width: 61 mm	Current range: 50 ... 500 A	Page: 29
KSK 421.4	Bus bar 1: 20 x 10 mm Round conductor: 20 mm Transformer width: 71 mm	Current range: 40 ... 500 A	Page: 30
KSK 231.5	Bus bar 1: 30 x 10 mm Round conductor: 28 mm Transformer width: 50 mm	Current range: 60 ... 500 A	Page: 31
KSK 31.3	Bus bar 1: 30 x 10 mm Bus bar 2: 2x 20 x 10 mm Round conductor: 26 mm Transformer width: 61 mm	Current range: 50 ... 750 A	Page: 32
KSK 31.4	Bus bar 1: 30 x 10 mm Bus bar 2: 2x 20 x 10 mm Round conductor: 28 mm Transformer width: 61 mm	Current range: 50 ... 750 A	Page: 33
KSK 31.5	Bus bar 1: 30 x 10 mm Bus bar 2: 2x 20 x 10 mm Round conductor: 28 mm Transformer width: 61 mm	Current range: 40 ... 750 A	Page: 34

KSK 318.3	Bus bar 1: 31 x 18 mm Round conductor: 26 mm Transformer width: 61 mm	Current range: 60 ... 600 A	Page: 35
KSK 41.4	Bus bar 1: 40 x 10 mm Bus bar 2: 2x 30 x 5 mm Round conductor: 32 mm Transformer width: 71 mm	Current range: 50 ... 1000 A	Page: 36
KSK 541.4	Bus bar 1: 40 x 10 mm Bus bar 2: 2x 30 x 5 mm Round conductor: 32 mm Transformer width: 86 mm	Current range: 30 ... 750 A	Page: 37
KSK 41.5	Bus bar 1: 40 x 10 mm Bus bar 2: 2x 30 x 5 mm Round conductor: 32 mm Transformer width: 71 mm	Current range: 60 ... 1000 A	Page: 38
KSK 41.3	Bus bar 1: 40 x 12 mm Bus bar 2: 32 x 18 mm Round conductor: 26 mm Transformer width: 61 mm	Current range: 100 ... 750 A	Page: 39
KSK 412.4	Bus bar 1: 40 x 12 mm Bus bar 2: 30 x 15 mm Round conductor: 30,5 mm Transformer width: 71 mm	Current range: 50 ... 800 A	Page: 40
KSK 51.4	Bus bar 1: 50 x 12 mm Bus bar 2: 2x 40 x 10 mm Round conductor: 44 mm Transformer width: 86 mm	Current range: 100 ... 1250 A	Page: 41
KSK 561.4	Bus bar 1: 60 x 10 mm Bus bar 2: 2x 50 x 10 mm Round conductor: 44 mm Transformer width: 86 mm	Current range: 200 ... 1250 A	Page: 42
KSK 61.4	Bus bar 1: 60 x 10 mm Bus bar 2: 2x 50 x 10 mm Round conductor: 44 mm Transformer width: 96 mm	Current range: 200 ... 1200 A	Page: 43
KSK 63.4	Bus bar 1: 60 x 30 mm Bus bar 2: 50 x 40 mm Round conductor: 44 mm Transformer width: 96 mm	Current range: 300 ... 1600 A	Page: 44

KSK 63.6	Bus bar 1: 60 x 30 mm Round conductor: 30 mm Transformer width: 88 mm	Current range: 200 ... 2000 A	Page: 45
KSK 81.4	Bus bar 1: 80 x 10 mm Bus bar 2: 2x 60 x 10 mm Round conductor: 55 mm Transformer width: 120 mm	Current range: 400 ... 2000 A	Page: 46
KSK 83.4	Bus bar 1: 84 x 34 mm Round conductor: 34 mm Transformer width: 96 mm	Current range: 300 ... 2000 A	Page: 47
KSK 101.4	Bus bar 1: 100 x 10 mm Bus bar 2: 2x 80 x 10 mm Round conductor: 70 mm Transformer width: 130 mm	Current range: 500 ... 2000 A	Page: 49
KSK 103.3	Bus bar 1: 2x 100 x 10 mm Bus bar 2: 3x 80 x 10 mm Round conductor: 85 mm Transformer width: 172 mm	Current range: 750 ... 3000 A	Page: 50
KSK 105.3	Bus bar 1: 100 x 56 mm Transformer width: 129 mm	Current range: 400 ... 4000 A	Page: 51
KSK 105.6	Bus bar 1: 100 x 55 mm Round conductor: 55 mm Transformer width: 129 mm	Current range: 600 ... 3000 A	Page: 52
KSK 105.6N	Bus bar 1: 100 x 55 mm Round conductor: 55 mm Transformer width: 129 mm	Current range: 3000 ... 4000 A	Page: 53
KSK 123.3	Bus bar 1: 123 x 30 mm Bus bar 2: 3x 100 x 10 mm Round conductor: 100 mm Transformer width: 172 mm	Current range: 750 ... 3000 A	Page: 54
KSK 127.3	Bus bar 1: 122 x 71 mm Transformer width: 159 mm	Current range: 400 ... 4000 A	Page: 55

KSK 127.4	Bus bar 1: 120 x 70 mm Round conductor: 70 mm Transformer width: 159 mm	Current range: 1000 ... 2500 A	Page: 56
KSK 127.6	Bus bar 1: 120 x 70 mm Round conductor: 70 mm Transformer width: 205 mm	Current range: 1000 ... 6000 A	Page: 57
KSK 129.10	Bus bar 1: 120 x 90 mm Round conductor: 90 mm Transformer width: 250 mm	Current range: 1000 ... 750 0A	Page: 58

KSK 176.3

Low-Power CT

Bus bar 1	17 x 6 mm
Round conductor	15,2 mm
Transformer width	45 mm
Height	65 mm
Depth	46 mm

	Secondary current / Class
Primary current [A]	333 mV Cl. 1 Art.-no.
75	17631-9001
80	17631-9002
100	17631-9003
125	17631-9004
150	17631-9005
160	17631-9006
200	17631-9007
250	17631-9008

		Art.-no.
	Snap-on mounting, type E	**55013**
	Sealed shutter	**–**

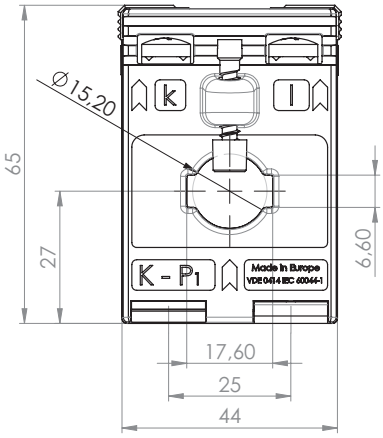

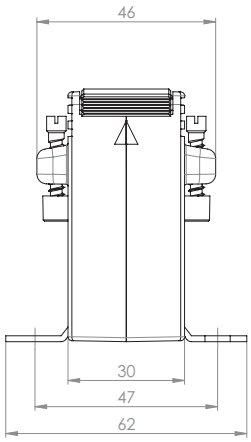

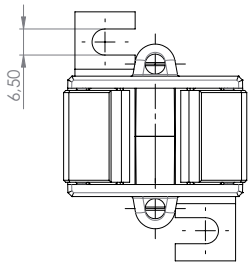

Other output signals like 22.5 mV, 150 mV, 225 mV on demand.
Class 0.5, 0.5s, 0.2, 0.2s on request.

KSK 205.3

Low-Power CT

Bus bar 1	20 x 5 mm
Round conductor	17,5 mm
Transformer width	49,5 mm
Height	65 mm
Depth	50 mm

	Secondary current / Class
Primary current [A]	333 mV Cl. 1 Art.-no.
60	2053-9001
75	2053-9002
80	2053-9003
100	2053-9004
150	2053-9005
200	2053-9006
250	2053-9007
300	2053-9008
400	2053-9009

		Art.-no.
	Snap-on mounting, type F	**55014**
	Sealed shutter	**–**

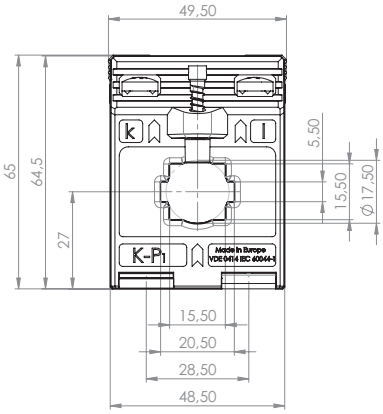

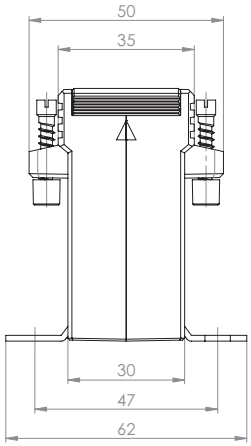

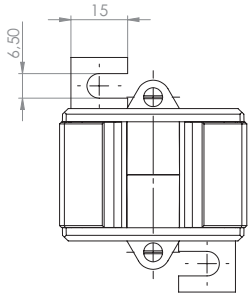

Other output signals like 22.5 mV, 150 mV, 225 mV on demand.
Class 0.5, 0.5s, 0.2, 0.2s on request.

KSK 21.3

Low-Power CT

Bus bar 1	20 x 10 mm
Round conductor	19,2 mm
Transformer width	61 mm
Height	75,5 mm
Depth	48 mm

	Secondary current / Class
Primary current [A]	333 mV Cl. 1 Art.-no.
75	2131-9001
80	2131-9002
100	2131-9003
125	2131-9004
150	2131-9005
160	2131-9006
200	2131-9007
250	2131-9008
300	2131-9009
400	2131-9010
500	2131-9011

		Art.-no.
	Snap-on mounting, type A	**53011**
	Sealed shutter, type A	**59040**

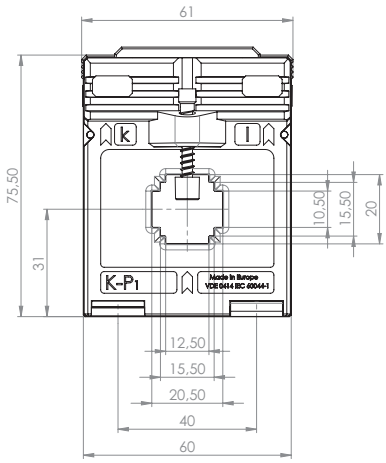

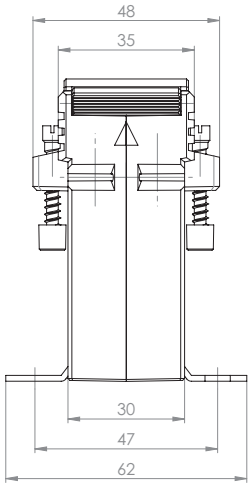

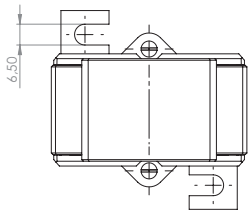

Other output signals like 22.5 mV, 150 mV, 225 mV on demand.
Class 0.5, 0.5s, 0.2, 0.2s on request.

KSK 421.4

Low-Power CT

Bus bar 1	20 x 10 mm
Round conductor	20 mm
Transformer width	71 mm
Height	85,5 mm
Depth	58 mm

	Secondary current / Class
Primary current [A]	333 mV Cl. 1 Art.-no
40	4214-9001
50	4214-9002
60	4214-9003
75	4214-9004
80	4214-9005
100	4214-9006
125	4214-9007
150	4214-9008
200	4214-9009
250	4214-9010
300	4214-9011
400	4214-9012
500	4214-9013

		Art.-no.
	Snap-on mounting, type D	**55012**
	Sealed shutter, type B	**59041**

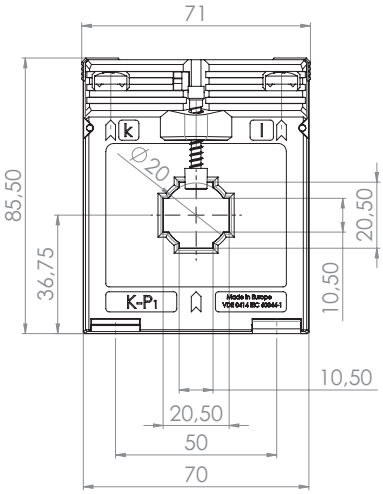

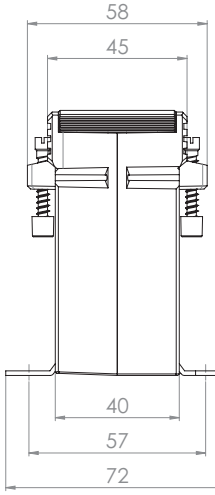

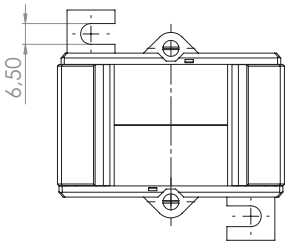

Other output signals like 22.5 mV, 150 mV, 225 mV on demand.
Class 0.5, 0.5s, 0.2, 0.2s on request.

KSK 231.5

Low-Power CT

Bus bar 1	30 x 10 mm
Round conductor	28 mm
Transformer width	50 mm
Height	70 mm
Depth	68 mm

	Secondary current / Class
Primary current [A]	333 mV Cl. 1 Art.-no.
60	2315-9001
75	2315-9002
80	2315-9003
100	2315-9004
125	2315-9005
150	2315-9006
200	2315-9007
250	2315-9008
300	2315-9009
400	2315-9010
500	2315-9011

		Art.-no.
	Snap-on mounting	–
	Sealed shutter	–

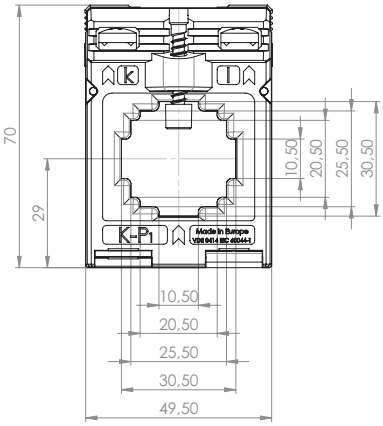

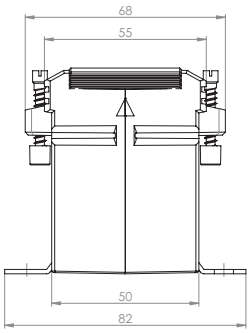

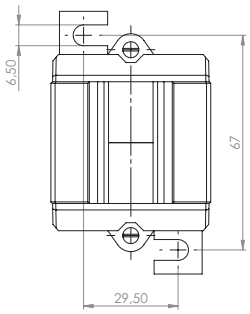

Other output signals like 22.5 mV, 150 mV, 225 mV on demand.
Class 0.5, 0.5s, 0.2, 0.2s on request.

KSK 31.3

Low-Power CT

Bus bar 1	30 x 10 mm
Bus bar 2	2 x 20 x 10 mm
Round conductor	26 mm
Transformer width	61 mm
Height	75,5 mm
Depth	48 mm

	Secondary current / Class	
Primary current [A]	333 mV Cl. 1 Art.-no.	333 mV Cl. 0,5 Art.-no.
50	313-9001	313-8001
60	313-9002	313-8002
75	313-9003	
80	313-9004	
100	313-9005	313-8005
150	313-9006	
200	313-9007	313-8007
250	313-9008	
300	313-9009	
400	313-9010	313-8010
500	313-9011	
600	313-9012	
630	313-9015	313-8015
750	313-9013	
800	313-9014	313-8014

		Art.-no.
	Snap-on mounting, type A	**53011**
	Sealed shutter, type A	**59040**

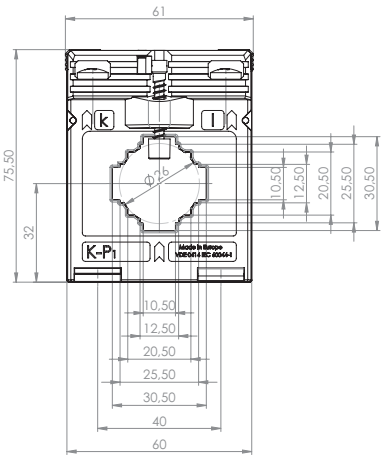

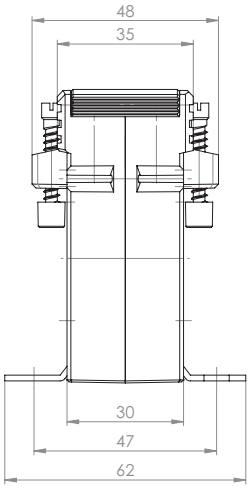

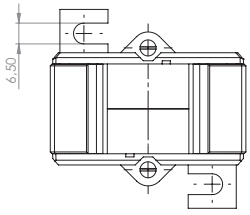

Other output signals like 22.5 mV, 150 mV, 225 mV on demand.
Class 0.5, 0.5s, 0.2, 0.2s on request.

KSK 31.4

Low-Power CT

Bus bar 1	30 x 10 mm
Bus bar 2	2 x 20 x 10 mm
Round conductor	28 mm
Transformer width	61 mm
Height	75,5 mm
Depth	58 mm

	Secondary current / Class	
Primary current [A]	333 mV Cl. 1 Art.-no.	333 mV Cl. 0,5 Art.-no.
50	314-9001	
60	314-9002	
75	314-9003	
80	314-9004	
100	314-9005	
150	314-9006	
200	314-9007	
250	314-9008	
300	314-9009	314-8009
400	314-9010	
500	314-9011	
600	314-9012	
750	314-9013	

		Art.-no.
	Snap-on mounting, type B	**54011**
	Sealed shutter, type B	**59041**

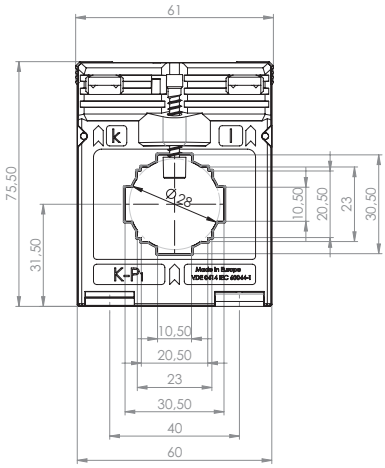

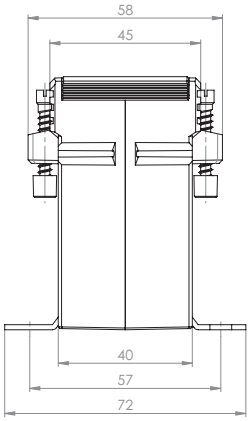

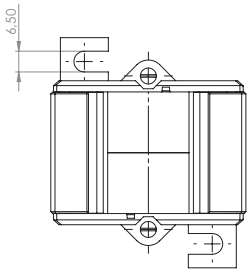

Other output signals like 22.5 mV, 150 mV, 225 mV on demand.
Class 0.5, 0.5s, 0.2, 0.2s on request.

KSK 31.5

Low-Power CT

Bus bar 1	30 x 10 mm
Bus bar 2	2 x 20 x 10 mm
Round conductor	28 mm
Transformer width	61 mm
Height	75,5 mm
Depth	68 mm

	Secondary current / Class
Primary current [A]	333 mV Cl. 1 Art.-no.
40	315-9001
50	315-9002
60	315-9003
75	315-9004
80	315-9005
100	315-9006
150	315-9007
200	315-9008
250	315-9009
300	315-9010
400	315-9011
500	315-9012
600	315-9013
750	315-9014

		Art.-no.
	Snap-on mounting, type C	**55011**
	Sealed shutter, type B	**59041**

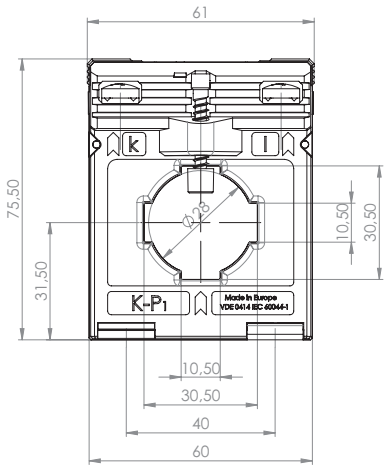

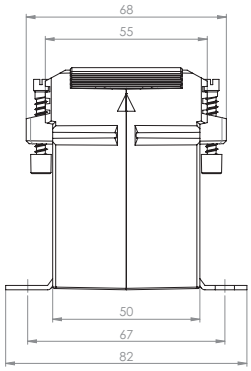

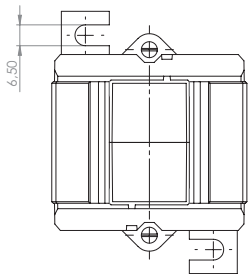

Other output signals like 22.5 mV, 150 mV, 225 mV on demand.
Class 0.5, 0.5s, 0.2, 0.2s on request.

KSK 318.3

Low-Power CT

Bus bar 1	31 x 18 mm
Round conductor	26 mm
Transformer width	61 mm
Height	75,5 mm
Depth	48 mm

	Secondary current / Class	
Primary current [A]	333 mV Cl. 1 Art.-no.	333 mV Cl. 0,5 Art.-no.
60	3183-9001	
80	3183-9002	
100	3183-9003	
150	3183-9004	
200	3183-9005	
250	3183-9006	
300	3183-9007	
400	3183-9008	
500	3183-9009	3183-8009
600	3183-9010	
630	3183-9011	3183-8011
800	3183-9012	3183-8012

		Art.-no.
	Snap-on mounting, type A	**53011**
	Sealed shutter, type A	**59040**

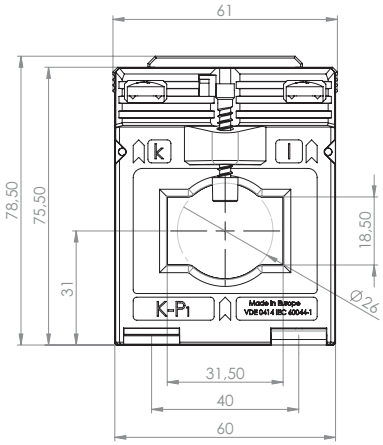

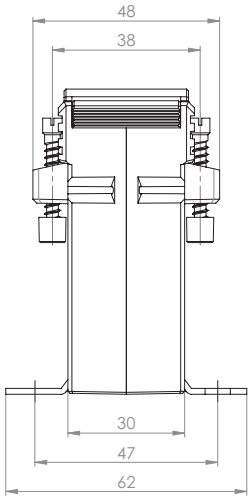

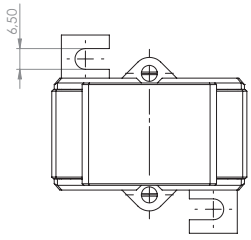

Other output signals like 22.5 mV, 150 mV, 225 mV on demand.
Class 0.5, 0.5s, 0.2, 0.2s on request.

KSK 41.4

Low-Power CT

Bus bar 1	40 x 10 mm
Bus bar 2	2 x 30 x 5 mm
Round conductor	32 mm
Transformer width	71 mm
Height	85,5 mm
Depth	58 mm

	Secondary current / Class	
Primary current [A]	333 mV Cl. 1 Art.-no.	333 mV Cl. 0,5 Art.-no.
50	414-9001	
60	414-9002	
75	414-9003	
80	414-9004	
100	414-9005	
150	414-9006	
200	414-9007	
250	414-9008	
300	414-9009	
400	414-9010	414-8010
500	414-9011	
600	414-9012	
750	414-9013	
800	414-9014	
1000	414-9015	

		Art.-no.
	Snap-on mounting, type D	**55012**
	Sealed shutter, type B	**59041**

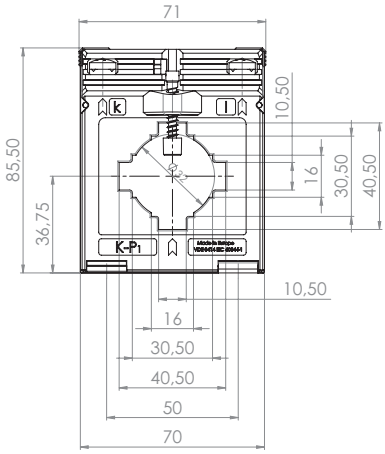

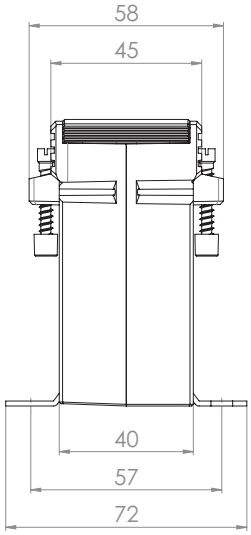

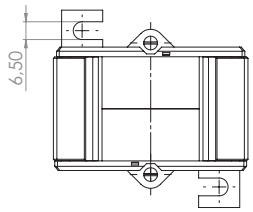

Other output signals like 22.5 mV, 150 mV, 225 mV on demand.
Class 0.5, 0.5s, 0.2, 0.2s on request.

KSK 541.4

Low-Power CT

Bus bar 1	40 x 10 mm
Bus bar 2	2 x 30 x 5 mm
Round conductor	32 mm
Transformer width	86 mm
Height	98,5 mm
Depth	58 mm

	Secondary current / Class
Primary current [A]	333 mV Cl. 1 Art.-no.
30	5414-9001
40	5414-9002
50	5414-9003
60	5414-9004
75	5414-9005
80	5414-9006
100	5414-9007
125	5414-9008
150	5414-9009
200	5414-9010
250	5414-9011
300	5414-9012
400	5414-9013
500	5414-9014
600	5414-9015
750	5414-9016
800	5414-9017
1000	5414-9018

		Art.-no.
	Snap-on mounting	**–**
	Sealed shutter, type C	**59042**

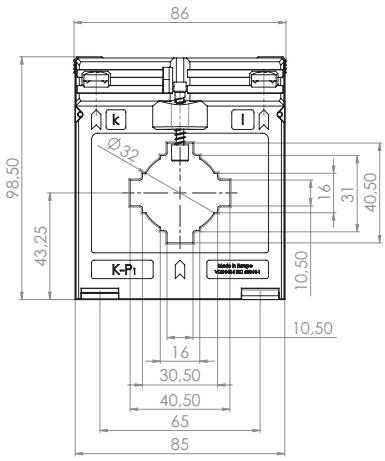

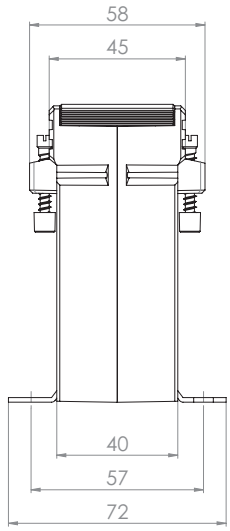

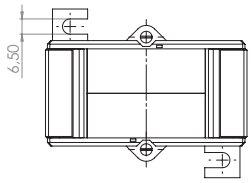

Other output signals like 22.5 mV, 150 mV, 225 mV on demand.
Class 0.5, 0.5s, 0.2, 0.2s on request.

KSK 41.5

Low-Power CT

Bus bar 1	40 x 10 mm
Bus bar 2	2 x 30 x 5 mm
Round conductor	32 mm
Transformer width	71 mm
Height	85,5 mm
Depth	68 mm

	Secondary current / Class
Primary current [A]	333 mV Cl. 1 Art.-no.
60	415-9001
75	415-9002
80	415-9003
100	415-9004
150	415-9005
200	415-9006
250	415-9007
300	415-9008
400	415-9009
500	415-9010
600	415-9011
750	415-9012
800	415-9013
1000	415-9014

		Art.-no.
	Snap-on mounting, type C	**55011**
	Sealed shutter, type B	**59041**

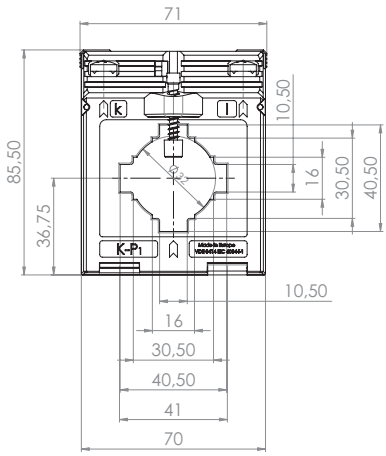

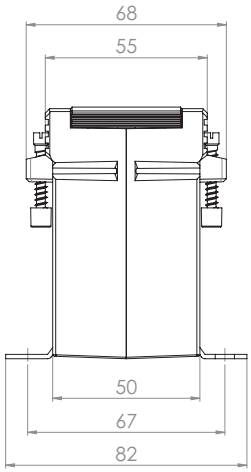

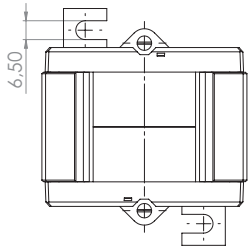

Other output signals like 22.5 mV, 150 mV, 225 mV on demand.
Class 0.5, 0.5s, 0.2, 0.2s on request.

KSK 41.3

Low-Power CT

Bus bar 1	40 x 12 mm
Bus bar 2	32 x 18 mm
Round conductor	26 mm
Transformer width	61 mm
Height	75,5 mm
Depth	48 mm

	Secondary current / Class
Primary current [A]	333 mV Cl. 1 Art.-no.
100	413-9001
150	413-9002
200	413-9003
250	413-9004
300	413-9005

		Art.-no.
	Snap-on mounting, type A	**53011**
	Sealed shutter, type A	**59040**

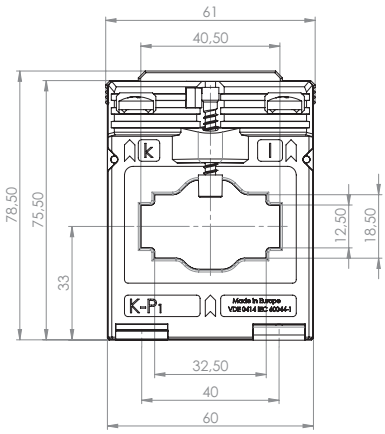

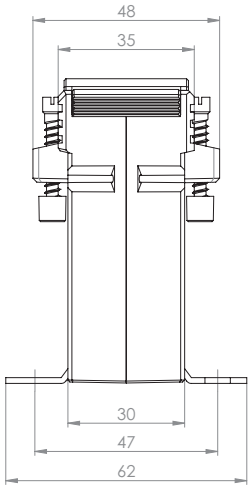

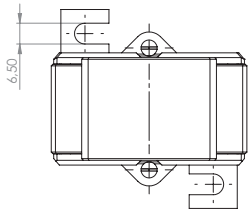

Other output signals like 22.5 mV, 150 mV, 225 mV on demand.
Class 0.5, 0.5s, 0.2, 0.2s on request.

KSK 412.4

Low-Power CT

Bus bar 1	40 x 12 mm
Bus bar 2	30 x 15 mm
Round conductor	30,5 mm
Transformer width	71 mm
Height	85,5 mm
Depth	58 mm

	Secondary current / Class
Primary current [A]	333 mV Cl. 1 Art.-no.
50	4124-9001
60	4124-9002
75	4124-9003
80	4124-9004
100	4124-9005
150	4124-9006
200	4124-9007
250	4124-9008
300	4124-9009
400	4124-9010
500	4124-9011
600	4124-9012
750	4124-9013
800	4124-9014

		Art.-no.
	Snap-on mounting, type D	**55012**
	Sealed shutter, type B	**59041**

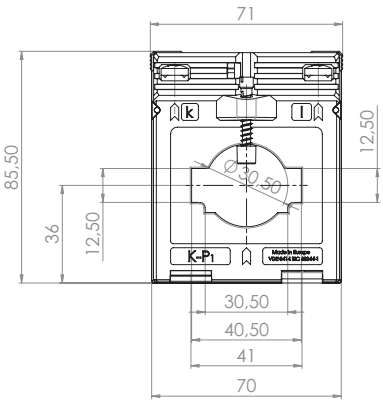

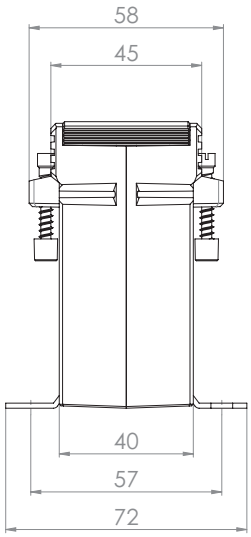

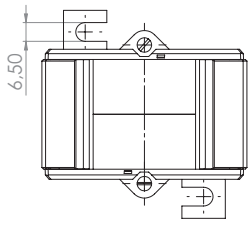

Other output signals like 22.5 mV, 150 mV, 225 mV on demand.
Class 0.5, 0.5s, 0.2, 0.2s on request.

KSK 51.4

Low-Power CT

Bus bar 1	50 x 12 mm
Bus bar 2	2 x 40 x 10 mm
Round conductor	44 mm
Transformer width	86 mm
Height	98,5 mm
Depth	58 mm

	Secondary current / Class	
Primary current [A]	333 mV Cl. 1 Art.-no.	333 mV Cl. 0,5 Art.-no.
100	514-9001	
150	514-9002	
200	514-9003	
250	514-9004	
300	514-9005	
400	514-9006	
500	514-9007	
600	514-9008	
630	514-9014	514-8014
750	514-9009	
800	514-9010	
1000	514-9011	
1200	514-9012	
1250	514-9013	

		Art.-no.
	Snap-on mounting	**–**
	Sealed shutter, type C	**59042**

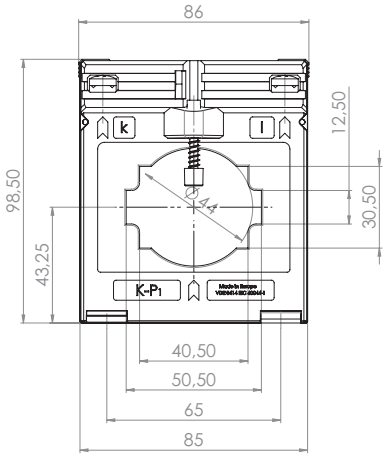

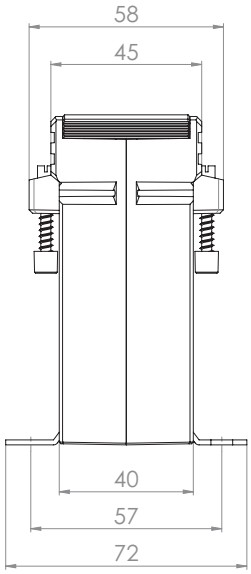

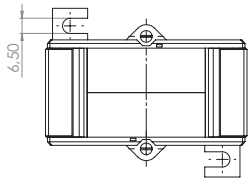

Other output signals like 22.5 mV, 150 mV, 225 mV on demand.
Class 0.5, 0.5s, 0.2, 0.2s on request.

KSK 561.4

Low-Power CT

Bus bar 1	60 x 10 mm
Bus bar 2	30 x 40 mm
Bus bar 3	2 x 50 x 10 mm
Round conductor	44 mm
Transformer width	86 mm
Height	98,5 mm
Depth	58 mm

	Secondary current / Class	
Primary current [A]	333 mV Cl. 1 Art.-no.	333 mV Cl. 0,5 Art.-no.
200	5614-9001	
250	5614-9002	
300	5614-9003	
400	5614-9004	5614-8004
500	5614-9005	5614-8005
600	5614-9006	
630	5614-9012	5614-8012
750	5614-9007	
800	5614-9008	
1000	5614-9009	
1200	5614-9010	
1250	5614-9011	

		Art.-no.
	Snap-on mounting	**–**
	Sealed shutter, type C	**59042**

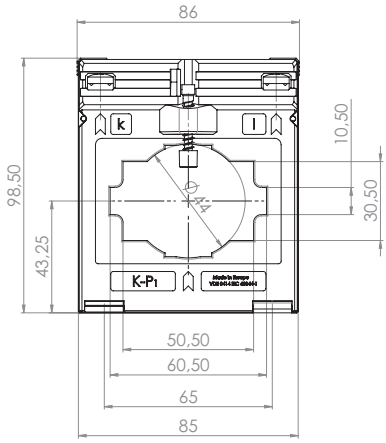

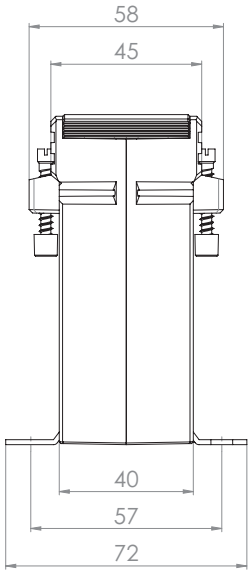

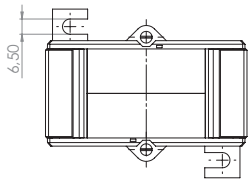

Other output signals like 22.5 mV, 150 mV, 225 mV on demand.
Class 0.5, 0.5s, 0.2, 0.2s on request.

KSK 61.4

Low-Power CT

Bus bar 1	63 x 10 mm
Bus bar 2	2 x 50 x 10 mm
Round conductor	44 mm
Transformer width	96 mm
Height	105,5 mm
Depth	58 mm

	Secondary current / Class
Primary current [A]	333 mV Cl. 1 Art.-no.
200	614-9001
250	614-9002
300	614-9003
400	614-9004
500	614-9005
600	614-9006
750	614-9007
800	614-9008
1000	614-9009
1200	614-9010
1250	614-9011
1500	614-9012
1600	614-9013

		Art.-no.
	Snap-on mounting	**–**
	Sealed shutter, type C	**59042**

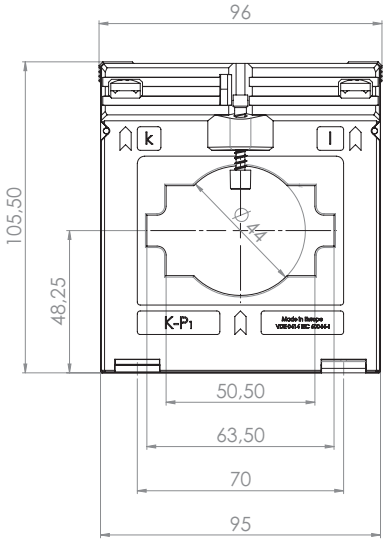

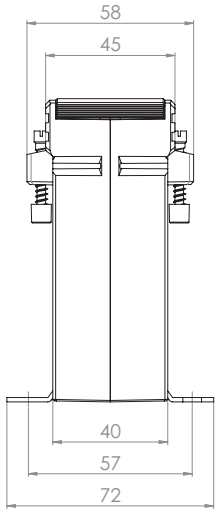

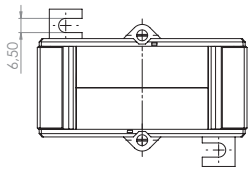

Other output signals like 22.5 mV, 150 mV, 225 mV on demand.
Class 0.5, 0.5s, 0.2, 0.2s on request.

KSK 63.4

Low-Power CT

Bus bar 1	60 x 30 mm
Bus bar 2	50 x 40 mm
Round conductor	44 mm
Transformer width	96 mm
Height	105,5 mm
Depth	58 mm

	Secondary current / Class
Primary current [A]	333 mV Cl. 1 Art.-no.
300	634-9001
400	634-9002
500	634-9003
600	634-9004
750	634-9005
800	634-9006
1000	634-9007
1200	634-9008
1250	634-9009
1500	634-9010
1600	634-9011

		Art.-no.
	Snap-on mounting	**–**
	Sealed shutter, type C	**59042**

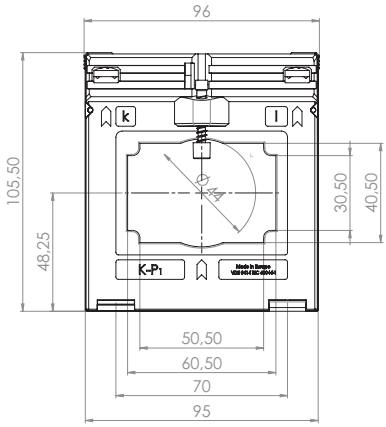

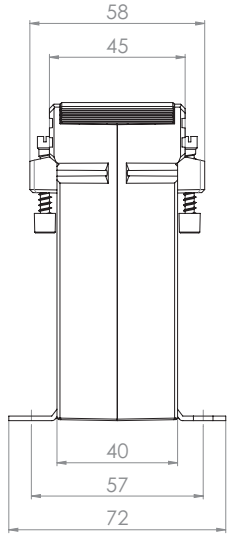

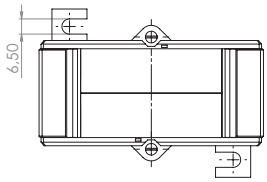

Other output signals like 22.5 mV, 150 mV, 225 mV on demand.
Class 0.5, 0.5s, 0.2, 0.2s on request.

KSK 63.6

Low-Power CT

Bus bar 1	60 x 30 mm
Round conductor	30 mm
Transformer width	88 mm
Height	129 mm
Depth	78 mm

	Secondary current / Class
Primary current [A]	333 mV Cl. 1 Art.-no.
200	636-9001
250	636-9002
300	636-9003
400	636-9004
500	636-9005
600	636-9006
750	636-9007
800	636-9008
1000	636-9009
1200	636-9010
1250	636-9011
1500	636-9012
1600	636-9013
2000	636-9014

		Art.-no.
	Snap-on mounting	**–**
	Sealed shutter, type C	**59042**

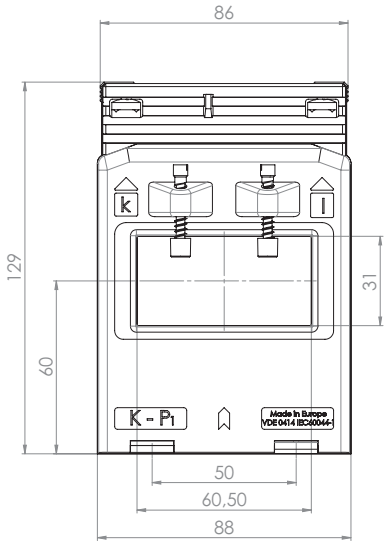

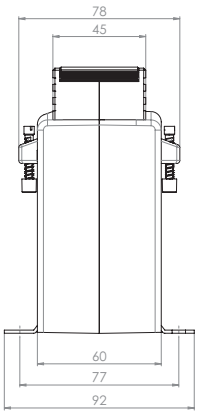

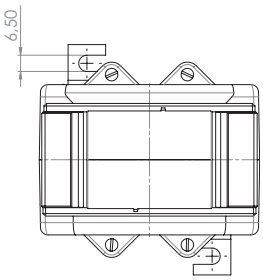

Other output signals like 22.5 mV, 150 mV, 225 mV on demand.
Class 0.5, 0.5s, 0.2, 0.2s on request.

KSK 81.4

Low-Power CT

Bus bar 1	80 x 10 mm
Bus bar 2	60 x 30 mm
Bus bar 3	2 x 60 x 10 mm
Round conductor	55 mm
Transformer width	120 mm
Height	123,5 mm
Depth	58 mm

	Secondary current / Class	
Primary current [A]	333 mV Cl. 1 Art.-no	333 mV Cl. 0,5 Art.-no.
400	814-9001	
500	814-9002	
600	814-9003	
630	814-9012	814-8012
750	814-9004	
800	814-9005	
1000	814-9006	
1200	814-9007	
1250	814-9008	
1500	814-9009	
1600	814-9010	
2000	814-9011	

		Art.-no.
	Snap-on mounting	**–**
	Sealed shutter, type C	**59042**

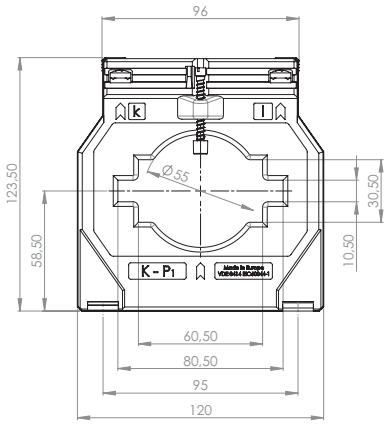

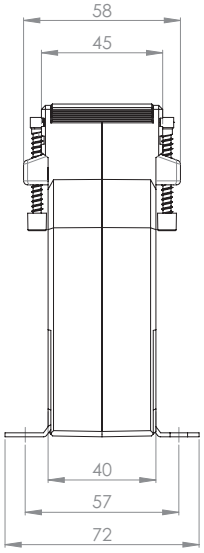

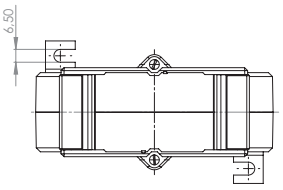

Other output signals like 22.5 mV, 150 mV, 225 mV on demand.
Class 0.5, 0.5s, 0.2, 0.2s on request.

KSK 83.4

Low-Power CT

Selectable positions of the secondary terminals allow flexible positions of installation.

Secondary current / Class		
Primary current [A]	333 mV Cl. 1 Art.-no.	333 mV Cl. 0,5 Art.-no.
300	834-9001-x	834-8001-x
400	834-9002-x	
500	834-9003-x	
600	834-9004-x	
750	834-9005-x	
800	834-9006-x	
1000	834-9007-x	
1200	834-9008-x	
1250	834-9009-x	
1500	834-9010-x	
1600	834-9011-x	
1800	834-9012-x	
2000	834-9013-x	

Bus bar 1	84 x 34 mm	
Round conductor	34 mm	
Transformer width	96 mm	
Height	117 mm	
Depth	68 mm	

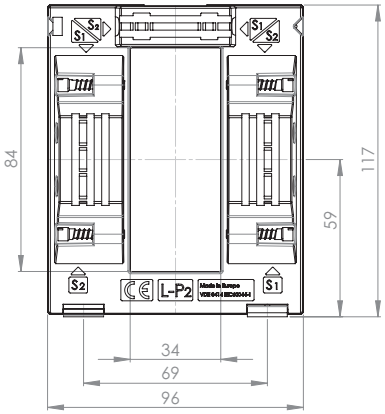

		Art.-no.
	Snap-on mounting	–
	Sealed shutter	–

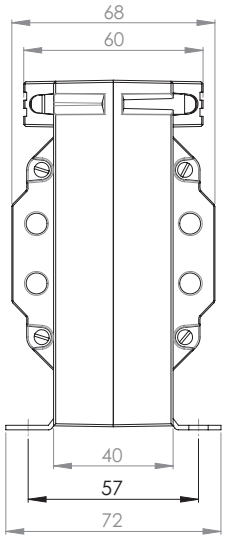

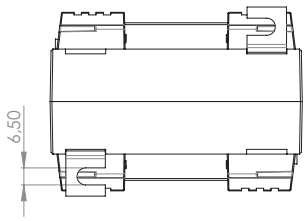

Other output signals like 22.5 mV, 150 mV, 225 mV on demand.
Class 0.5, 0.5s, 0.2, 0.2s on request.

KSK 83.4

Low-Power CT

The secondary terminals of the current transformer type KSK 83.4 can be realized in 6 different positions. Please be so kind and choose with your order.

Connection

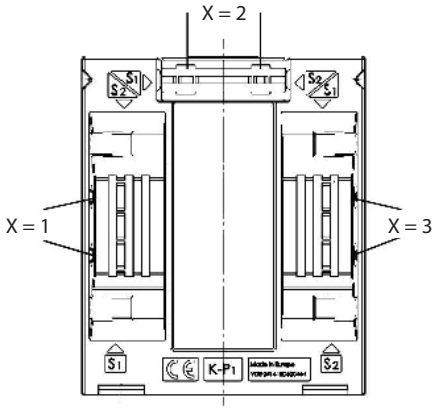

Connection

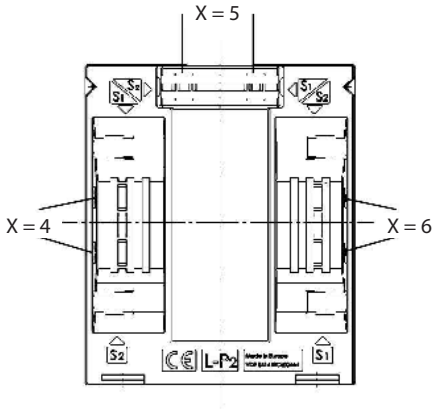

Order example

KSK 83.4 800/5A 10VA Kl.1
Connection option K-P_1 (h.b.) top
Art.-no. 100066-2

KSK 101.4

Low-Power CT

Bus bar 1	100 x 10 mm
Bus bar 2	2 x 80 x 10 mm
Round conductor	70 mm
Transformer width	130 mm
Height	141 mm
Depth	58 mm

	Secondary current / Class
Primary current [A]	333 mV Cl. 1 Art.-no.
500	1014-9001
600	1014-9002
750	1014-9003
800	1014-9004
1000	1014-9005
1200	1014-9006
1250	1014-9007
1500	1014-9008
1600	1014-9009
1800	1014-9010
2000	1014-9011

		Art.-no.
	Snap-on mounting	**–**
	Sealed shutter, type C	**59042**

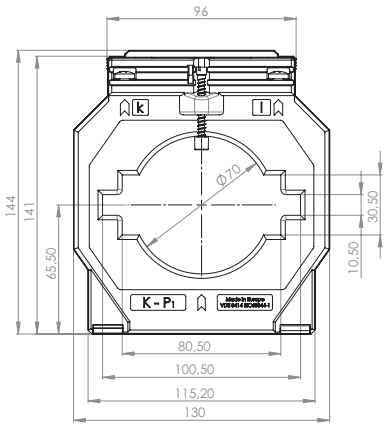

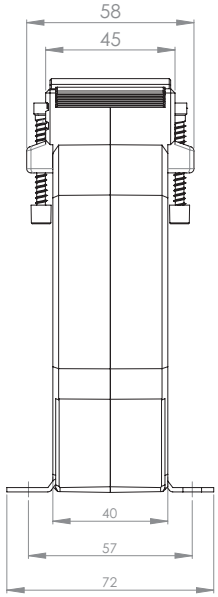

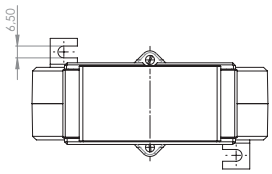

Other output signals like 22.5 mV, 150 mV, 225 mV on demand.
Class 0.5, 0.5s, 0.2, 0.2s on request.

KSK 103.3

Low-Power CT

Bus bar 1	2 x 100 x 10 mm
Bus bar 2	3 x 80 x 10 mm
Round conductor	85 mm
Transformer width	172 mm
Height	184,8 mm
Depth	52 mm

	Secondary current / Class
Primary current [A]	333 mV Cl. 1 Art.-no.
750	1033-9001
800	1033-9002
1000	1033-9003
1200	1033-9004
1250	1033-9005
1500	1033-9006
1600	1033-9007
2000	1033-9008
2500	1033-9009
3000	1033-9010

		Art.-no.
	Snap-on mounting	**–**
	Sealed shutter, type A	**59040**

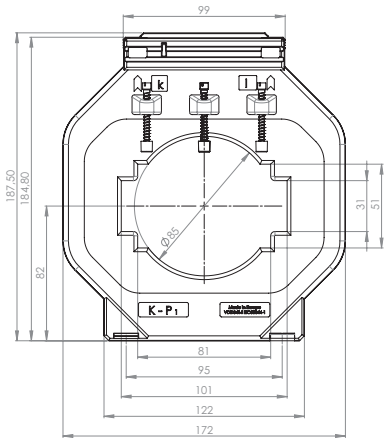

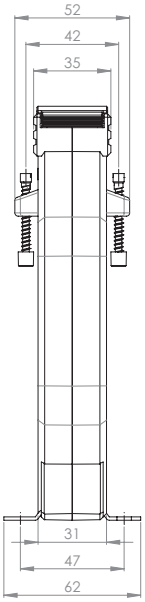

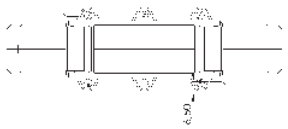

Other output signals like 22.5 mV, 150 mV, 225 mV on demand.
Class 0.5, 0.5s, 0.2, 0.2s on request.

KSK 105.3

Low-Power CT

Bus bar 1	100 x 56 mm
Transformer width	129 mm
Height	156 mm
Depth	30 mm

	Secondary current / Class
Primary current [A]	333 mV Cl. 1 Art.-no.
400	1053-9001
500	1053-9002
600	1053-9003
750	1053-9004
800	1053-9005
1000	1053-9006
1250	1053-9007
1500	1053-9008
1600	1053-9009
2000	1053-9010
2500	1053-9011
3000	1053-9012
4000	1053-9013

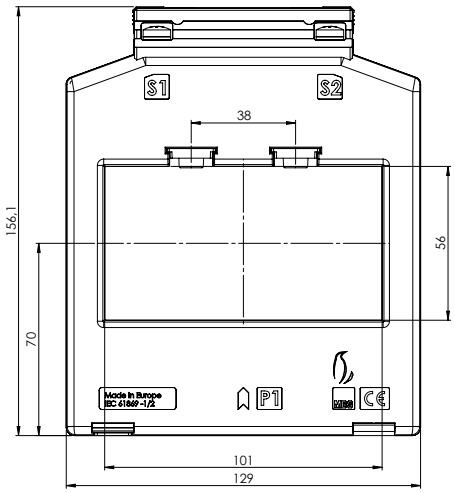

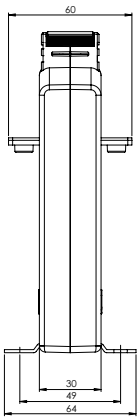

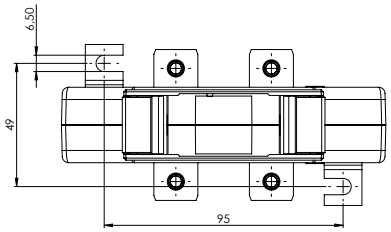

Other output signals like 22.5 mV, 150 mV, 225 mV on demand.
Class 0.5, 0.5s, 0.2, 0.2s on request.

KSK 105.6

Low-Power CT

Bus bar 1	100 x 55 mm
Round conductor	55 mm
Transformer width	129 mm
Height	167 mm
Depth	78 mm

	Secondary current / Class
Primary current [A]	333 mV Cl. 1 Art.-no.
600	1056-9001
750	1056-9002
800	1056-9003
1000	1056-9004
1200	1056-9005
1250	1056-9006
1500	1056-9007
1600	1056-9008
1800	1056-9009
2000	1056-9010
2400	1056-9011
2500	1056-9012
3000	1056-9013

		Art.-no.
	Snap-on mounting	**–**
	Sealed shutter, type C	**59042**

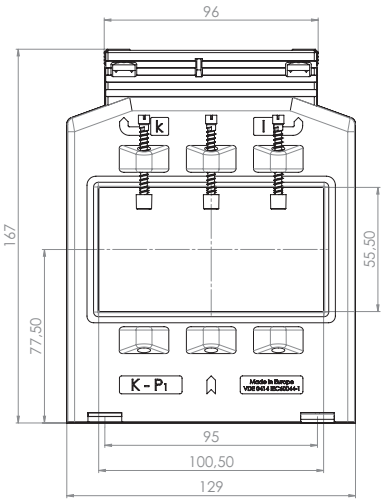

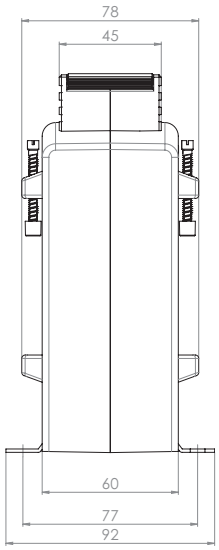

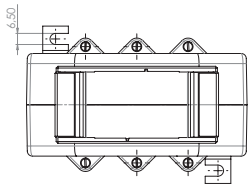

Other output signals like 22.5 mV, 150 mV, 225 mV on demand.
Class 0.5, 0.5s, 0.2, 0.2s on request.

KSK 105.6N

Low-Power CT

	Secondary current / Class	
Primary current [A]	333 mV Cl. 1 Art.-no.	333 mV Cl. 0,5 Art.-no.
2500	1056N-9001	
3000	1056N-9002	
3200	1056N-9003	1056N-8003

Bus bar 1	100 x 55 mm
Round conductor	55 mm
Transformer width	129 mm
Height	214 mm
Depth	78 mm

		Art.-no.
	Snap-on mounting	–
	Sealed shutter, type C	**59042**

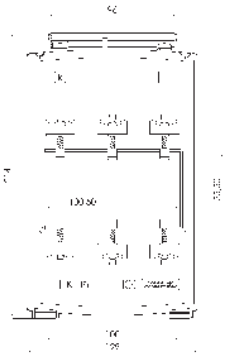

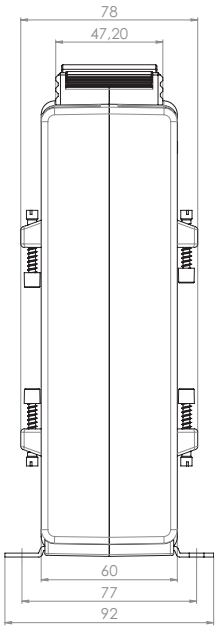

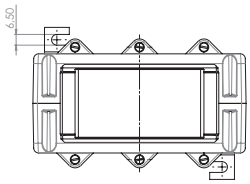

Other output signals like 22.5 mV, 150 mV, 225 mV on demand.
Class 0.5, 0.5s, 0.2, 0.2s on request.

KSK 123.3

Low-Power CT

Bus bar 1	123 x 30 mm
Bus bar 2	3 x 100 x 10 mm
Round conductor	100 mm
Transformer width	172 mm
Height	184,8 mm
Depth	52 mm

	Secondary current / Class
Primary current [A]	333 mV Cl. 1 Art.-no.
750	1233-9001
1000	1233-9002
1200	1233-9003
1250	1233-9004
1500	1233-9005
1600	1233-9006
1800	1233-9007
2000	1233-9008
2500	1233-9009
3000	1233-9010

		Art.-no.
	Snap-on mounting	**–**
	Sealed shutter, type A	**59040**

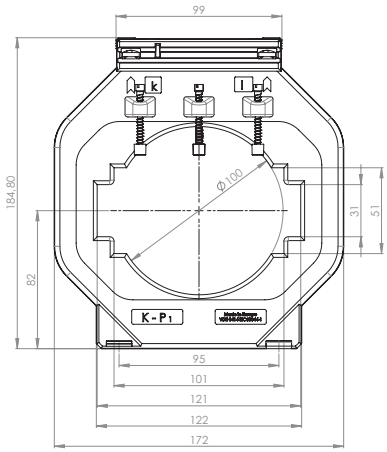

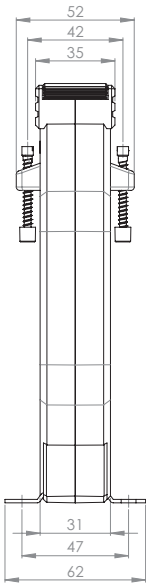

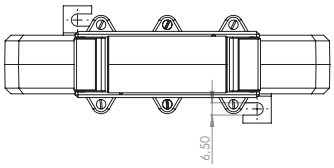

Other output signals like 22.5 mV, 150 mV, 225 mV on demand.
Class 0.5, 0.5s, 0.2, 0.2s on request.

KSK 127.3

Low-Power CT

Bus bar 1	122 x 71 mm
Transformer width	159 mm
Height	188 mm
Depth	30 mm

	Secondary current / Class
Primary current [A]	333 mV Cl. 1 Art.-no.
400	1273-9001
500	1273-9002
600	1273-9003
750	1273-9004
800	1273-9005
1000	1273-9006
1250	1273-9007
1500	1273-9008
1600	1273-9009
2000	1273-9010
2500	1273-9011
3000	1273-9012
4000	1273-9013

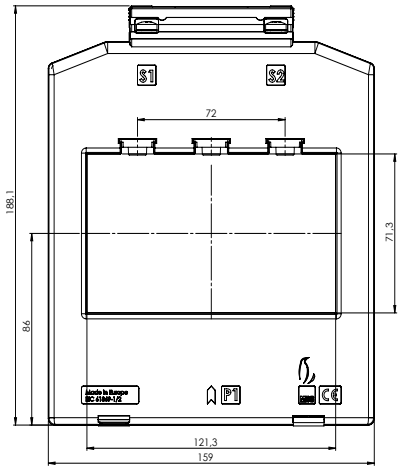

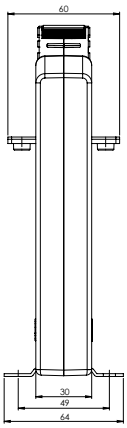

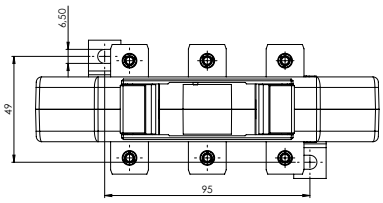

Other output signals like 22.5 mV, 150 mV, 225 mV on demand.
Class 0.5, 0.5s, 0.2, 0.2s on request.

KSK 127.4

Low-Power CT

	Secondary current / Class
Primary current [A]	333 mV Cl. 1 Art.-no.
1000	1274-9001
1200	1274-9002
1250	1274-9003
1500	1274-9004
1600	1274-9005
1800	1274-9006
2000	1274-9007
2500	1274-9008

		Art.-no.
	Snap-on mounting	**–**
	Sealed shutter, type C	**59042**

Bus bar 1	120 x 70 mm
Round conductor	70 mm
Transformer width	159 mm
Height	195,3 mm
Depth	58 mm

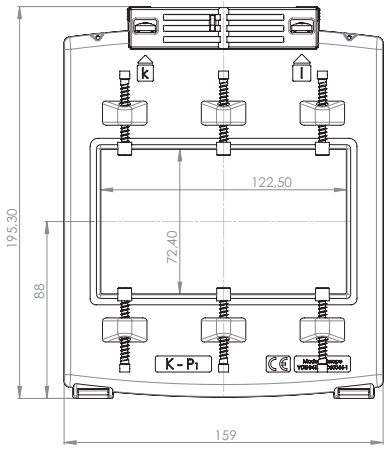

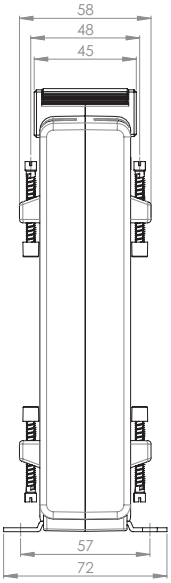

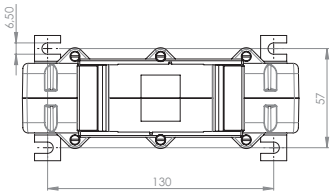

Other output signals like 22.5 mV, 150 mV, 225 mV on demand.
Class 0.5, 0.5s, 0.2, 0.2s on request.

KSK 127.6

Low-Power CT

Bus bar 1	120 x 70 mm
Round conductor	70 mm
Transformer width	205 mm
Height	203 mm
Depth	78 mm

	Secondary current / Class
Primary current [A]	333 mV Cl. 1 Art.-no.
1000	1276-9001
1200	1276-9002
1250	1276-9003
1500	1276-9004
1800	1276-9005
2000	1276-9006
2500	1276-9007
3000	1276-9008
4000	1276-9009
5000	1276-9010
6000	1276-9011

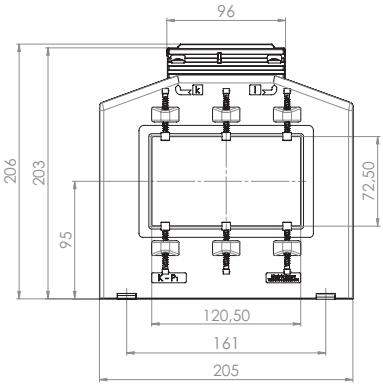

		Art.-no.
	Snap-on mounting	**–**
	Sealed shutter, type C	**59042**

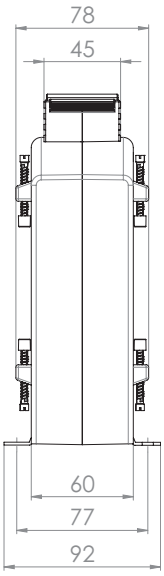

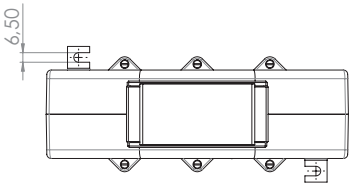

Other output signals like 22.5 mV, 150 mV, 225 mV on demand.
Class 0.5, 0.5s, 0.2, 0.2s on request.

KSK 129.10

Low-Power CT

Bus bar 1	120 x 90 mm
Round conductor	90 mm
Transformer width	250 mm
Height	247 mm
Depth	118 mm

	Secondary current / Class
Primary current [A]	333 mV Cl. 1 Art.-no.
1000	12910-9001
1200	12910-9002
1250	12910-9003
1500	12910-9004
1600	12910-9005
1800	12910-9006
2000	12910-9007
2500	12910-9008
3000	12910-9009
4000	12910-9010
5000	12910-9011
6000	12910-9012
7500	12910-9013

		Art.-no.
	Snap-on mounting	**–**
	Sealed shutter, type C	**59042**

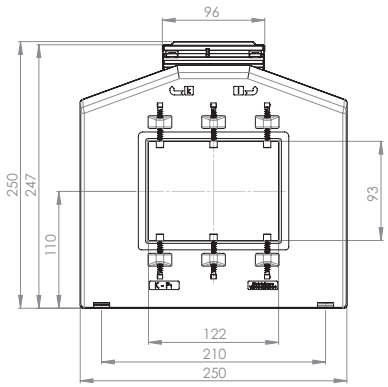

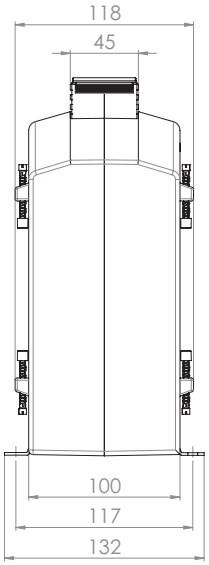

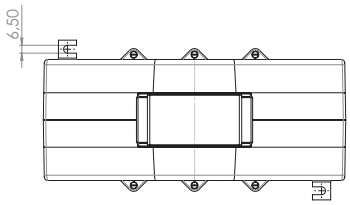

Other output signals like 22.5 mV, 150 mV, 225 mV on demand.
Class 0.5, 0.5s, 0.2, 0.2s on request.

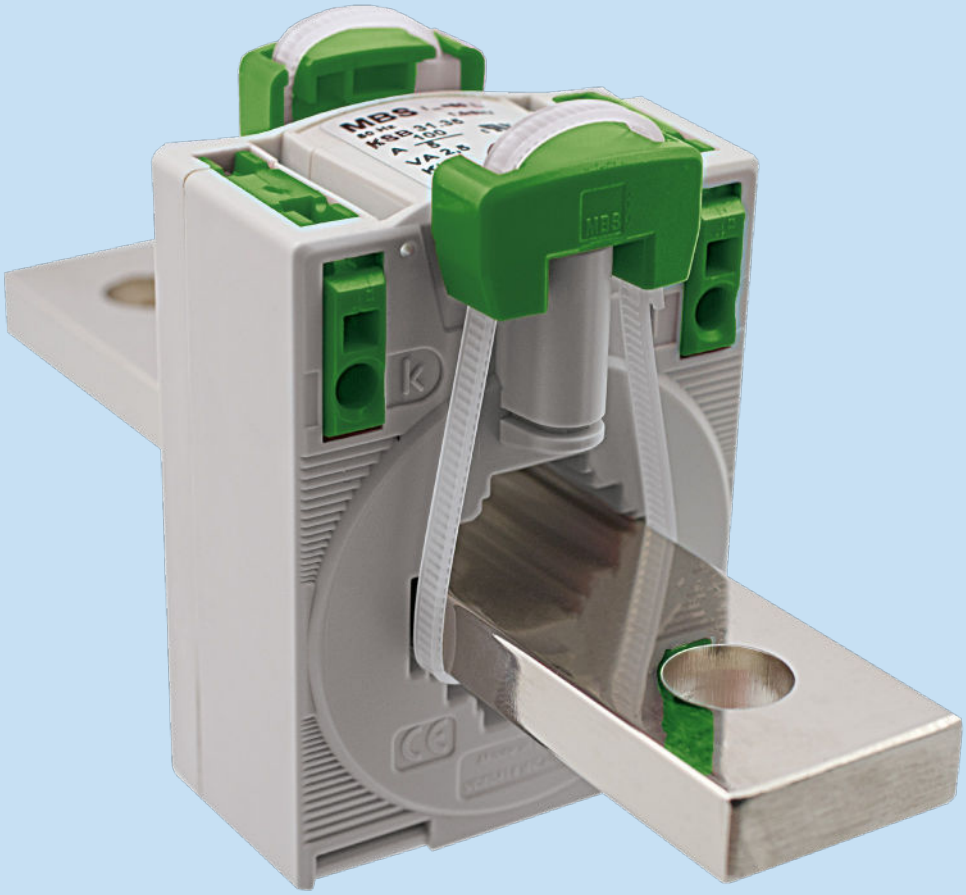
MBS

Low-voltage current transformers for industrial applications with screwless connection technology

CTB 31.35	Bus bar 1: 30 x 10 mm Bus bar 2: 25 x 12 mm Round conductor: 25,7 mm Transformer width: 60 mm	Current range: 50 ... 750 A	Page: 61
CTB 41.35	Bus bar 1: 40 x 10 mm Bus bar 2: 30 x 15 mm Round conductor: 31,8 mm Transformer width: 70 mm	Current range: 75 ... 1000 A	Page: 62
CTB 51.35	Bus bar 1: 50 x 12 mm Bus bar 2: 40 x 30 mm Round conductor: 43,7 mm Transformer width: 85 mm	Current range: 100 ... 1250 A	Page: 63
CTB 61.35	Bus bar 1: 63 x 10 mm Bus bar 2: 50 x 30 mm Round conductor: 43,7 mm Transformer width: 95 mm	Current range: 200 ... 1600 A	Page: 64
CTB 81.35	Bus bar 1: 80 x 10 mm Bus bar 2: 60 x 30 mm Round conductor: 54,7 mm Transformer width: 120 mm	Current range: 400 ... 2000 A	Page: 65
CTB 101.35	Bus bar 1: 100 x 10 mm Bus bar 2: 80 x 30 mm Round conductor: 70 mm Transformer width: 130 mm	Current range: 400 ... 2500 A	Page: 66

CTB 31.35

Low-Power CT

Bus bar 1	30 x 10 mm
Bus bar 2	25 x 12 mm
Bus bar 3	20 x 20 mm
Round conductor	25,7 mm
Transformer width	60 mm
Height	80,9 mm
Depth	52 mm

	Secondary current / Class	
Primary current [A]	333 mV Cl. 1 Art.-no.	333 mV Cl. 0,5 Art.-no.
50	3135-9001	
60	3135-9002	3135-8002
75	3135-9003	
80	3135-9004	
100	3135-9005	
125	3135-9006	
150	3135-9007	
200	3135-9008	
250	3135-9009	
300	3135-9010	3135-8010
400	3135-9011	
500	3135-9012	
600	3135-9013	
750	3135-9014	

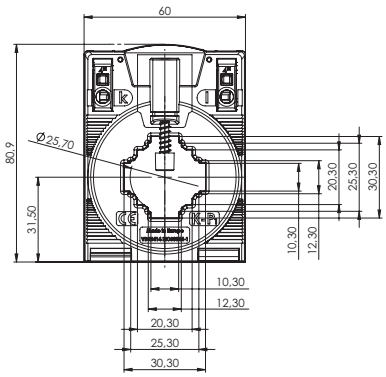

		Art.-no.
	Snap-on mounting CTB	**55015**
	Quick-Fix	**55021**
	Sealed shutter, type G	**59057**

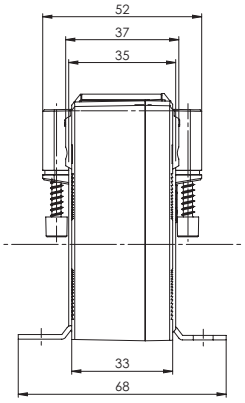

- UL certification; Certificate no.: 20100426-E336996
- World's first CT with screwless connection technology – „Cage Clamp®"
- Innovative time-saving connection of either solid or flexible secondary conductor not exceeding 4 mm^2 to be fitted either on the top or in front without ferrules
- Vibration and shock resistant
- Maintenance free gas-tight connection
- High current carrying capacity
- Therm. nominal continuous rated current I_{cth}: 1.2 x I_N
- Low-voltage CT for maximum operating voltage of 1.2 kV; use in 690 V networks possible

Other output signals like 22.5 mV, 150 mV, 225 mV on demand.
Class 0.5, 0.5s, 0.2, 0.2s on request.

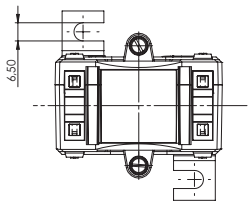

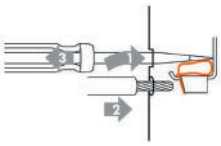

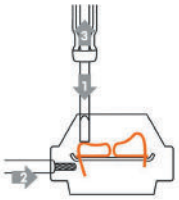

CTB 41.35

Low-Power CT

Bus bar 1	40 x 10 mm
Bus bar 2	30 x 15 mm
Round conductor	31,8 mm
Transformer width	70 mm
Height	91,15 mm
Depth	52 mm

	Secondary current / Class
Primary current [A]	333 mV Cl. 1 Art.-no.
75	4135-9001
80	4135-9002
100	4135-9003
125	4135-9004
150	4135-9005
200	4135-9006
250	4135-9007
300	4135-9008
400	4135-9009
500	4135-9010
600	4135-9011
750	4135-9012
800	4135-9013
1000	4135-9014

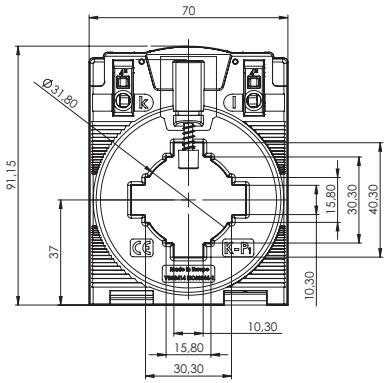

		Art.-no.
	Snap-on mounting CTB	**55015**
	Quick-Fix	**55021**
	Sealed shutter, type G	**59057**

- UL certification; Certificate no.: 20100426-E336996
- World's first CT with screwless connection technology – „Cage Clamp®"
- Innovative time-saving connection of either solid or flexible secondary conductor not exceeding 4 mm² to be fitted either on the top or in front without ferrules
- Vibration and shock resistant
- Maintenance free gas-tight connection
- High current carrying capacity
- Therm. nominal continuous rated current I_{cth}: 1.2 x I_N
- Low-voltage CT for maximum operating voltage of 1.2 kV; use in 690 V networks possible

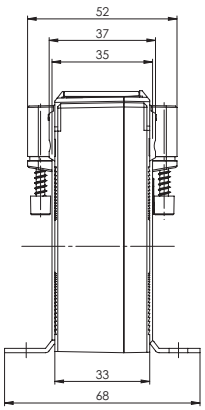

Other output signals like 22.5 mV, 150 mV, 225 mV on demand.
Class 0.5, 0.5s, 0.2, 0.2s on request.

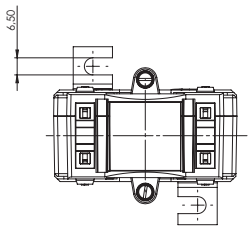

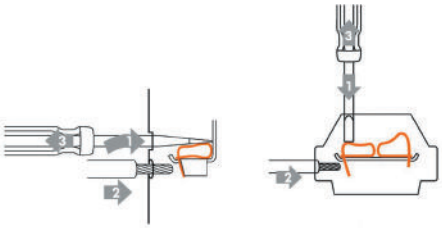

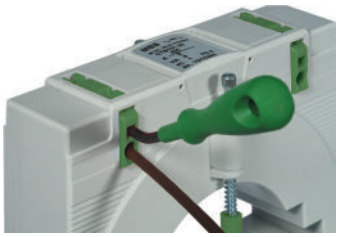

CTB 51.35

Low-Power CT

Bus bar 1	50 x 12 mm
Bus bar 2	40 x 30 mm
Round conductor	43,7 mm
Transformer width	85 mm
Height	105,25 mm
Depth	52 mm

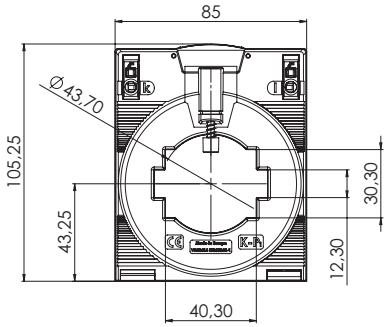

	Secondary current / Class
Primary current [A]	333 mV Cl. 1 Art.-no.
100	5135-9001
125	5135-9002
150	5135-9003
200	5135-9004
250	5135-9005
300	5135-9006
400	5135-9007
500	5135-9008
600	5135-9009
750	5135-9010
800	5135-9011
1000	5135-9012
1200	5135-9013
1250	5135-9014

		Art.-no.
	Quick-Fix	**55021**
	Sealed shutter, type H	**59058**

- UL certification; Certificate no.: 20100426-E336996
- World's first CT with screwless connection technology – „Cage Clamp®"
- Innovative time-saving connection of either solid or flexible secondary conductor not exceeding 4 mm² to be fitted either on the top or in front without ferrules
- Vibration and shock resistant
- Maintenance free gas-tight connection
- High current carrying capacity
- Therm. nominal continuous rated current I_{cth}: 1.2 x I_N
- Low-voltage CT for maximum operating voltage of 1.2 kV; use in 690 V networks possible

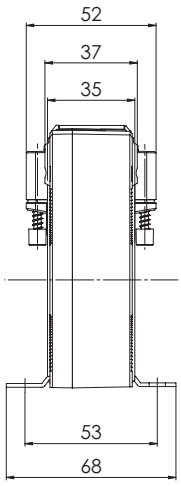

Other output signals like 22.5 mV, 150 mV, 225 mV on demand.
Class 0.5, 0.5s, 0.2, 0.2s on request.

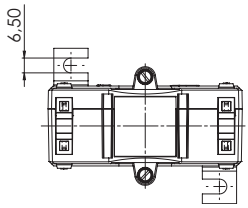

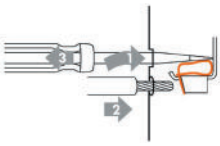

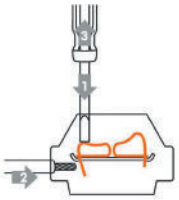

CTB 61.35

Low-Power CT

Bus bar 1	63 x 10 mm
Bus bar 2	50 x 30 mm
Round conductor	43,7 mm
Transformer width	95 mm
Height	114,86 mm
Depth	52 mm

	Secondary current / Class	
Primary current [A]	333 mV Cl. 1 Art.-no.	333 mV Cl. 0,5 Art.-no.
200	6135-9001	
250	6135-9002	
300	6135-9003	
400	6135-9004	
500	6135-9005	
600	6135-9006	6135-8006
750	6135-9007	
800	6135-9008	
1000	6135-9009	
1200	6135-9010	
1250	6135-9011	
1500	6135-9012	
1600	6135-9013	

		Art.-no.
	Quick-Fix	**55021**
	Sealed shutter, type J	**59059**

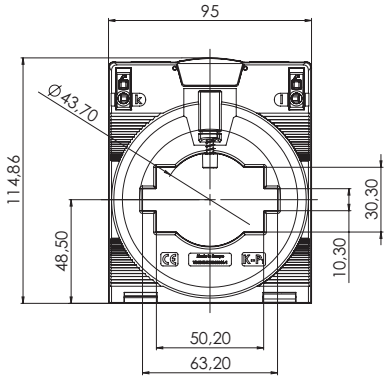

- UL certification; Certificate no.: 20100426-E336996
- World's first CT with screwless connection technology – „Cage Clamp®"
- Innovative time-saving connection of either solid or flexible secondary conductor not exceeding 4 mm² to be fitted either on the top or in front without ferrules
- Vibration and shock resistant
- Maintenance free gas-tight connection
- High current carrying capacity
- Therm. nominal continuous rated current I_{cth}: 1.2 x I_N
- Low-voltage CT for maximum operating voltage of 1.2 kV; use in 690 V networks possible

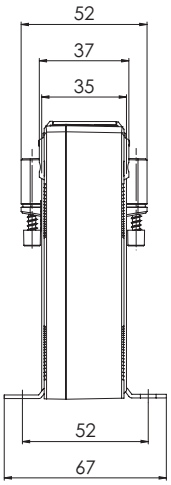

Other output signals like 22.5 mV, 150 mV, 225 mV on demand.
Class 0.5, 0.5s, 0.2, 0.2s on request.

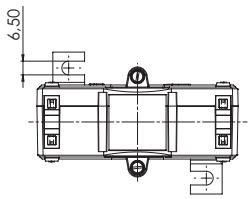

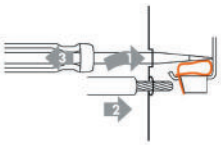

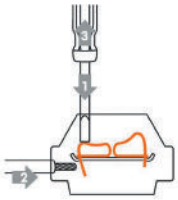

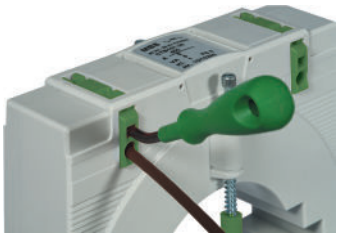

CTB 81.35

Low-Power CT

Bus bar 1	80 x 10 mm
Bus bar 2	60 x 30 mm
Round conductor	54,7 mm
Transformer width	120 mm
Height	134,66 mm
Depth	52 mm

	Secondary current / Class
Primary current [A]	333 mV Cl. 1 Art.-no.
400	8135-9001
500	8135-9002
600	8135-9003
750	8135-9004
800	8135-9005
1000	8135-9006
1200	8135-9007
1250	8135-9008
1500	8135-9009
1600	8135-9010
2000	8135-9011

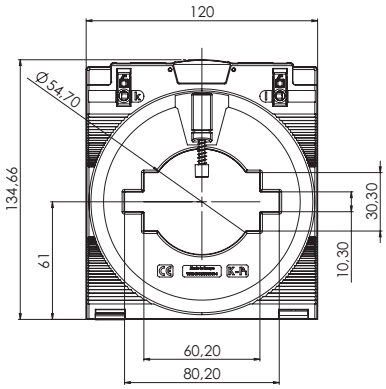

		Art.-no.
	Quick-Fix	**55021**
	Sealed shutter, type J	**59059**

- UL certification; Certificate no.: 20100426-E336996
- World's first CT with screwless connection technology – „Cage Clamp®"
- Innovative time-saving connection of either solid or flexible secondary conductor not exceeding 4 mm² to be fitted either on the top or in front without ferrules
- Vibration and shock resistant
- Maintenance free gas-tight connection
- High current carrying capacity
- Therm. nominal continuous rated current I_{cth}: 1.2 x I_N
- Low-voltage CT for maximum operating voltage of 1.2 kV; use in 690 V networks possible

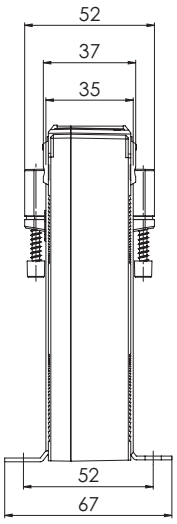

Other output signals like 22.5 mV, 150 mV, 225 mV on demand.
Class 0.5, 0.5s, 0.2, 0.2s on request.

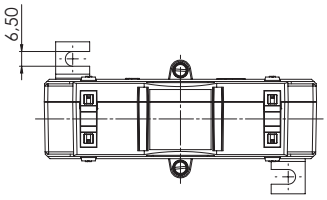

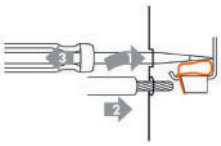

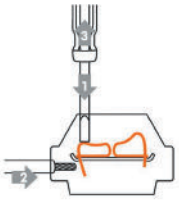

CTB 101.35

Low-Power CT

Bus bar 1	100 x 10 mm
Bus bar 2	80 x 30 mm
Round conductor	70 mm
Transformer width	130 mm
Height	147,49 mm
Depth	52 mm

	Secondary current / Class
Primary current [A]	333 mV Cl. 1 Art.-no.
400	10135-9001
500	10135-9002
600	10135-9003
750	10135-9004
800	10135-9005
1000	10135-9006
1200	10135-9007
1250	10135-9008
1500	10135-9009
1600	10135-9010
2000	10135-9011
2500	10135-9012

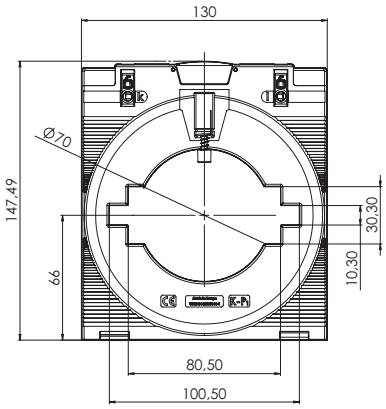

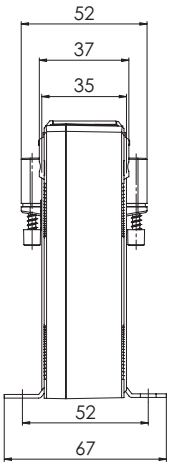

		Art.-no.
	Quick-Fix	**55021**
	Sealed shutter, type J	**59059**

- UL certification; Certificate no.: 20100426-E336996
- World's first CT with screwless connection technology – „Cage Clamp®"
- Innovative time-saving connection of either solid or flexible secondary conductor not exceeding 4 mm² to be fitted either on the top or in front without ferrules
- Vibration and shock resistant
- Maintenance free gas-tight connection
- High current carrying capacity
- Therm. nominal continuous rated current I_{cth}: 1.2 x I_N
- Low-voltage CT for maximum operating voltage of 1.2 kV; use in 690 V networks possible

Other output signals like 22.5 mV, 150 mV, 225 mV on demand.
Class 0.5, 0.5s, 0.2, 0.2s on request.

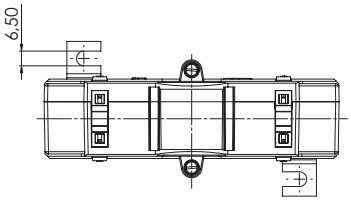

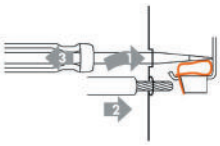

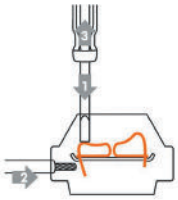

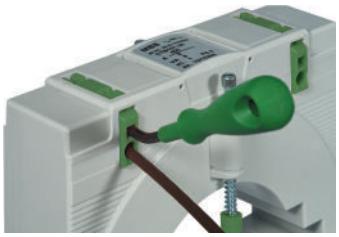

Low-voltage current transformers for industrial applications

KSW 30	Transformer width: 61 mm	Current range: 1 ... 20 A	Page: 69
KSW 40	Transformer width: 71 mm	Current range: 1 ... 30 A	Page: 70
KSW 40N	Transformer width: 71 mm	Current range: 30 ... 50 A	Page: 71

Wound current transformers

Based on the physical operating principle of current transformers, the required core volume transferring an amount of power, increases rapidly with a decreasing nominal current. As there are limits on increasing the transformer size, wound current transformers are being used.

Interim current transformers also belong to the group of wound current transformers. This construction is mainly used for primary currents of up to 10 A, and achieves a transformation at a higher or lower secondary current values. In addition to their application in adapting a measuring circuit on existing measuring units, interim current transformers are being used also for lowering the power loss by the transmission of analogically measured values over great distances. This is made possible by means of a squared dependence of the power loss from the flowing current.

$$P_V\,[W] = I_S^2 \times R_L$$

Specified therein:

P_v	Power loss in Watt
I_s	Secondary nominal current of the current transformer in Ampere
R_L	Lead resistance of the secondary connection cables in Ohm (Important: Lead resistance of the flow- and return conductor!)

This means when the original nominal current is halved, the conductor loss drops down to 25 % of its original value.

Note: Since an intermediate current transformer in the secondary circuit of a main transformer represents an additional inductive load, its own power requirement must be taken into account when selecting the correct main transformer.

For the correct power rating of the main transformer to be used, please use the following formula below:

$$P_{GH}\,[VA] = P_Z \times \left(\frac{I_2}{I_1}\right)^2 + P_E + P_E$$

Legende:

P_{GH}	Apparent power of the main transformer
P_Z	Secondary performance of the interim transformer (nominal performance inclusive of conductor losses)
P_E	Consumption of the interim transformer by nominal current (typical: approx. 3 VA)
P_{HZ}	Conductor losses between main- and interim transformer by nominal current
I_1	Primary nominal current of the interim transformer
I_2	Secondary nominal current of the interim transformer

KSW 30

Low-Power CT

Transformer width	61 mm
Height	75,5 mm
Depth	35 mm

	Secondary current / Class
Primary current [A]	333 mV Cl. 1 Art.-no.
1	30-9001
2,5	30-9002
5	30-9003
10	30-9004
15	30-9005
20	30-9006

		Art.-no.
	Snap-on mounting, type A	**53011**
	Sealed shutter, type A	**59040**

Cross section of primary side: max 4 mm² with ferrule, 6 mm² solid

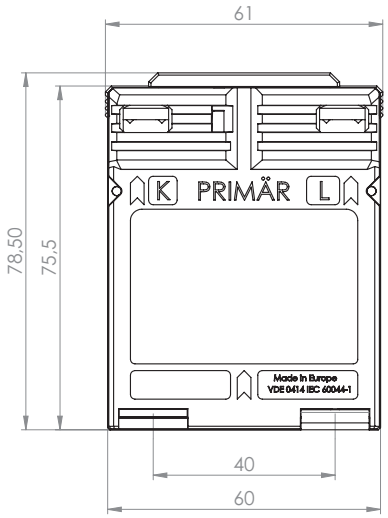

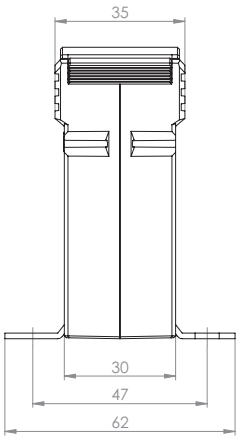

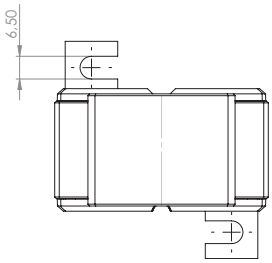

Other output signals like 22.5 mV, 150 mV, 225 mV on demand.
Class 0.5, 0.5s, 0.2, 0.2s on request.

KSW 40

Low-Power CT

Transformer width	71 mm
Height	85,5 mm
Depth	45 mm

	Secondary current / Class
Primary current [A]	333 mV Cl. 1 Art.-no.
1	40-9001
2,5	40-9002
5	40-9003
10	40-9004
15	40-9005
20	40-9006
25	40-9007
30	40-9008

		Art.-no.
	Snap-on mounting, type D	**55012**
	Sealed shutter, type B	**59041**

Cross section of primary side: max 4 mm² with ferrule, 6 mm² solid, max. 8 mm² with cable lugs

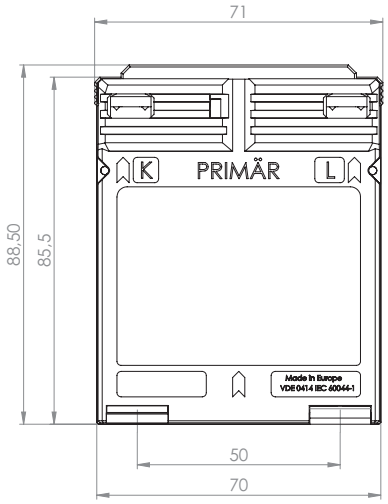

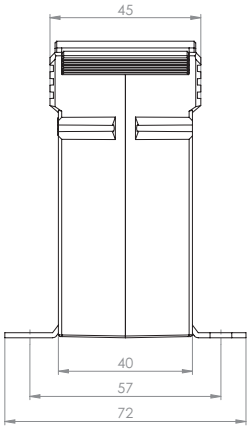

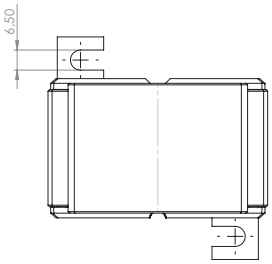

Other output signals like 22.5 mV, 150 mV, 225 mV on demand.
Class 0.5, 0.5s, 0.2, 0.2s on request.

KSW 40N

Low-Power CT

	Secondary current / Class
Primary current [A]	333 mV Cl. 1 Art.-no.
30	40N-9001
40	40N-9002
50	40N-9003

Transformer width	71 mm
Height	107 mm
Depth	55 mm

		Art.-no.
	Snap-on mounting, type C	**55011**
	Sealed shutter, type B	**59041**

Cross section of primary side: max 10 mm² with cable lugs

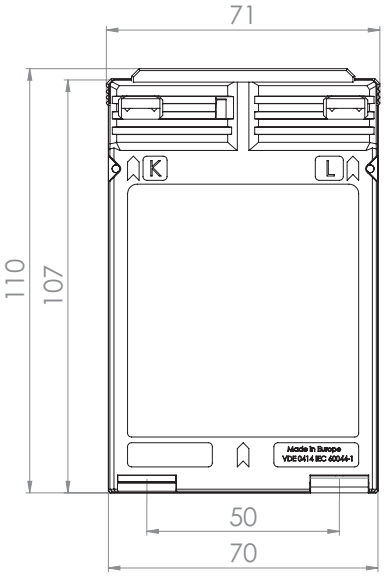

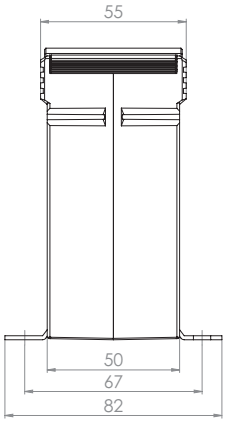

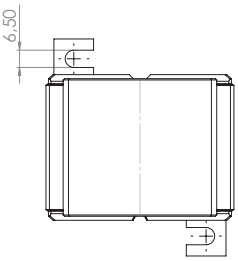

Other output signals like 22.5 mV, 150 mV, 225 mV on demand.
Class 0.5, 0.5s, 0.2, 0.2s on request.

Low-voltage current transformers for industrial applications

Split-core current transformer for isolated primary conductors

KBR 18	Round conductor: 18,5 mm Transformer width: 41,6 mm	Current range: 50 ... 250 A	Page: 73
KBR 32	Round conductor: 32,5 mm Transformer width: 59,2 mm	Current range: 100 ... 600 A	Page: 74
KBR 44	Round conductor: 44 mm Transformer width: 72,2 mm	Current range: 250 ... 1000 A	Page: 75

KBR 18

Low-Power CT

Primary current [A]	Output signal [mV]	Class 1
50	0...333	18-1001
75	0...333	18-1006
100	0...333	18-1011
125	0...333	18-1016
150	0...333	18-1021
200	0...333	18-1026
250	0...333	18-1031

Round conductor	18,5 mm
Transformer width	41,6 mm
Height	64,5 mm
Depth	68 mm

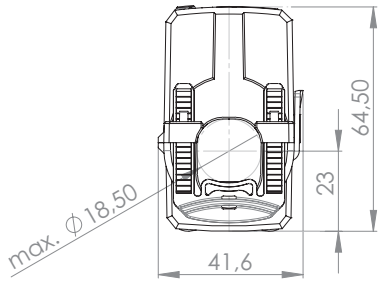

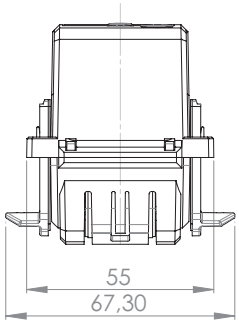

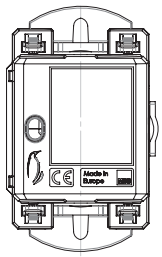

- Split-core current transformers are mainly used for an easy fitment and subsequent assembly into an already existing installation, without separating the primary conductor.
- The compact split-core current transformer KBR 18 has been developed to have easy access in already existing installations.
- Due to the „click"-system and the fixing-clasps even a one-hand mounting is possible.
- The delivery follows with 2.5 m connection cable 2 x 0.75 mm² (color coded;S1 = brown; S2 = blue), other lengths of the connection cables are possible on request.
- For the use as a current sensor the KBR 18 is optionally deliverable with a voltage output of 0 – 333 mV (Min. burden resistance ≥ 1 kΩ).
- Operating temperature: -5°C < T < +50°C
- Storage temperature: -25°C < T < +70°C

Other output signals like 22.5 mV, 150 mV, 225 mV on demand.
Class 0.5, 0.5s, 0.2, 0.2s on request.

KBR 32

Low-Power CT

Round conductor	32,5 mm
Transformer width	59,2 mm
Height	96,4 mm
Depth	90 mm

Primary current [A]	Output signal [mV] AV	Output signal [mA] DC	Cl. 1 Art.-no..
100	0...333	–	32-1011
	–	4...20	32-2011
125	0...333	–	32-1016
	–	4...20	32-2016
150	0...333	–	32-1021
	–	4...20	32-2021
200	0...333	–	32-1026
	–	4...20	32-2026
250	0...333	–	32-1031
	–	4...20	32-2031
300	0...333	–	32-1034
	–	4...20	32-2034
400	0...333	–	32-1036
	–	4...20	32-2036
500	0...333	–	32-1038
	–	4...20	32-2038
600	0...333	–	32-1040
	–	4...20	32-2040

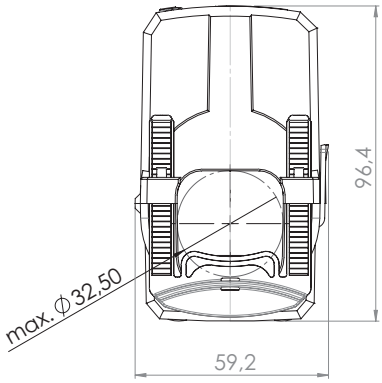

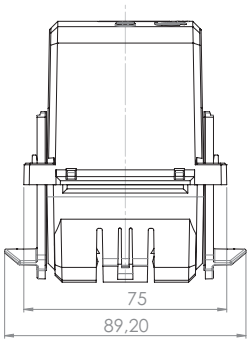

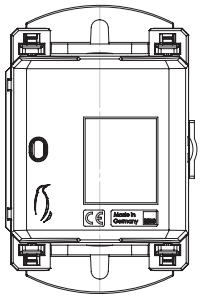

- Split-core current transformers are mainly used for an easy fitment and subsequent assembly into an already existing installation, without separating the primary conductor.
- The compact split-core current transformer KBR 32 has been developed to have easy access in already existing installations.
- Due to the „click"-system and the fixing-clasps even a one-hand mounting is possible.
- The KBR 32 with secondary 1A will be delivered with 2.5 m connection cable 2 x 0.75 mm² (color coded; S1 = brown; S2 = blue). Other lengths of the connection cables are possible on request.
  The secondary 5A – version will be delivered with 0.5m connection cable 2 x 1.5 mm².
- For the use as a current sensor the KBR 32 is optionally deliverable with a voltage output of 0 – 333 mV (min. burden resistance ≥ 1 kΩ).
  Moreover the KBR 32 is deliverable as a measuring transducer with a measuring output of 4…20 mA DC
- Operating temperature: -5°C < T < +50°C
- Storage temperature: -25°C < T < +70°C

Other output signals like 22.5 mV, 150 mV, 225 mV on demand.
Class 0.5, 0.5s, 0.2, 0.2s on request.

KBR 44

Low-Power CT

Round conductor	44 mm
Transformer width	72,2 mm
Height	120,6 mm
Depth	98 mm

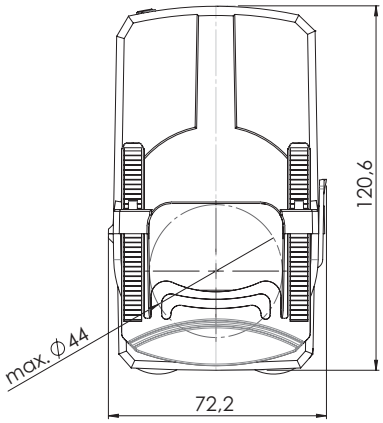

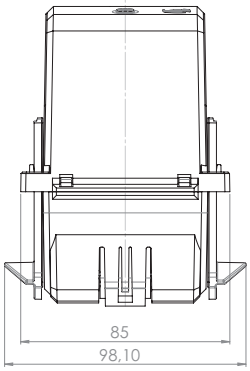

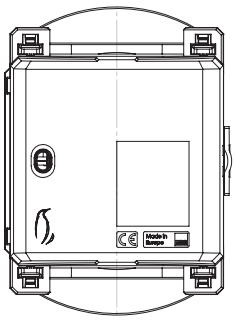

Primary current [A]	Output signal [mV] AV	Output signal [mA] DC	Cl. 1 Art.-no.
250	0...333	–	44-1001
	–	4...20	44-2001
300	0...333	–	44-1006
	–	4...20	44-2006
400	0...333	–	44-1011
	–	4...20	44-2011
500	0...333	–	44-1016
	–	4...20	44-2016
600	0...333	–	44-1021
	–	4...20	44-2021
750	0...333	–	44-1026
	–	4...20	44-2026
800	0...333	–	44-1031
	–	4...20	44-2031
1000	0...333	–	44-1036
	–	4...20	44-2036

- Split-core current transformers are mainly used for an easy fitment and subsequent assembly into an already existing installation, without separating the primary conductor.
- The compact split-core current transformer KBR 44 has been developed to have easy access in already existing installations.
- Due to the „click"-system and the fixing-clasps even a one-hand mounting is possible.
- The KBR 44 with secondary 1A will be delivered with 2.5 m connection cable 2 x 0.75 mm² (color coded; S1 = brown; S2 = blue). Other lengths of the connection cables are possible on request.
  The secondary 5A – version will be delivered with 0.5m connection cable 2 x 1.5 mm².
- For the use as a current sensor the KBR 32 is optionally deliverable with a voltage output of 0 – 333 mV (min. burden resistance ≥ 1 kΩ).
  Moreover the KBR 32 is deliverable as a measuring transducer with a measuring output of 4…20 mA DC.
- Operating temperature: -5°C < T < +50°C
- Storage temperature: -25°C < T < +70°C

Other output signals like 22.5 mV, 150 mV, 225 mV on demand.
Class 0.5, 0.5s, 0.2, 0.2s on request.

KBR 32 / 44

Technical characteristics for the KBR with output signal 4…20 mA:

- 2-wire connection, auxiliary power via output circuit
- Auxiliary power: 24 V DC ± 15 %, P_V = max. 1 VA
- Load-independent DC current: Live-zero, 4…20 mA
- External resistance: max. 300 Ω
- Current limit under overload: < 30 mA
- Residual ripple of the output current: ≤ 1 % p.p.
- Response time: < 300 ms

Wiring diagram of the KBR 32 / 44 (4…20 mA):

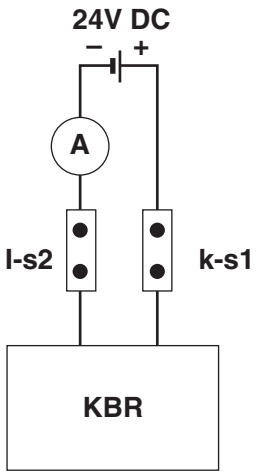

Low-voltage current transformers for industrial applications

Cable conversion current transformer

KSKBU 23	Bus bar 1: 20 x 30 mm Round conductor: 20 mm Transformer width: 93 mm	Current range: 100 ... 400 A	Page: 78
KSKBU 58	Bus bar 1: 50 x 80 mm Round conductor: 50 mm Transformer width: 125 mm	Current range: 250 ... 1000 A	Page: 79
KSKBU 812	Bus bar 1: 80 x 120 mm Round conductor: 80 mm Transformer width: 155 mm	Current range: 250 ... 1500 A	Page: 80
KSKBU 816	Bus bar 1: 80 x 160 mm Round conductor: 80 mm Transformer width: 195 mm	Current range: 1000 ... 5000 A	Page: 81

KSKBU 23

Low-Power CT

	Output signal / class		
Primary current [A]	333 mV Cl. 3 Art.-no.	333 mV Cl. 1 Art.-no.	333 mV Cl. 0,5 Art.-no.
100	23-9001		
150	23-9002		
200	23-9003		
250		23-9004	
300		23-9005	
400		23-9006	
			23-8001

Bus bar 1	20 x 30 mm
Round conductor	20 mm
Transformer width	93 mm
Height	106 mm
Depth	58 mm

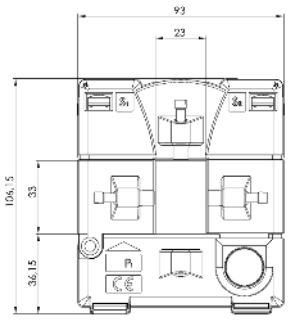

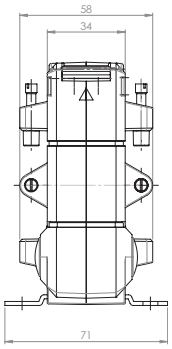

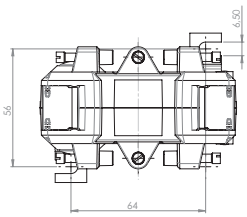

KSKBU 58

Low-Power CT

Bus bar 1	50 x 80 mm
Round conductor	50 mm
Transformer width	125 mm
Height	158 mm
Depth	58 mm

	Output signal / class	
Primary current [A]	333 mV Cl. 1 Art.-no.	333 mV Cl. 0,5 Art.-no.
250	58-9001	
300	58-9002	
400	58-9003	
		58-8001
500	58-9004	
		58-8002
600	58-9005	
		58-8003
750	58-9006	
		58-8004
800	58-9007	
		58-8005
1000	58-9008	
		58-8006

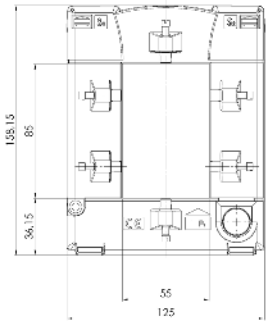

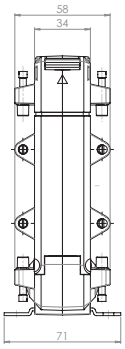

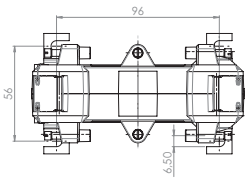

KSKBU 812

Low-Power CT

Bus bar 1	80 x 120 mm
Round conductor	80 mm
Transformer width	155 mm
Height	198 mm
Depth	58 mm

	Output signal / class	
Primary current [A]	333 mV Cl. 1 Art.-no.	333 mV Cl. 0,5 Art.-no.
250	812-9001	
300	812-9002	
400	812-9003	
500	812-9004	
		812-8001
600	812-9005	
		812-8002
750	812-9006	
		812-8003
800	812-9007	
		812-8004
1000	812-9008	
		812-8005
1200	812-9009	
		812-8006
1250	812-9010	
		812-8007
1500	812-9011	
		812-8008

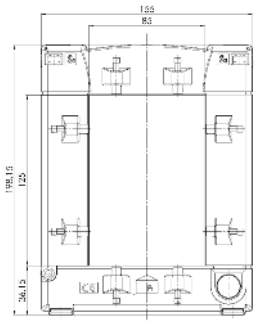

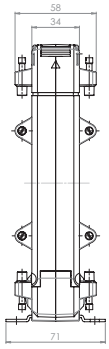

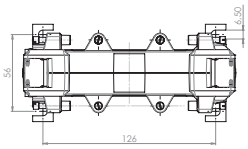

KSKBU 816

Low-Power CT

Bus bar 1	80 x 160 mm
Round conductor	80 mm
Transformer width	195 mm
Height	243 mm
Depth	79 mm

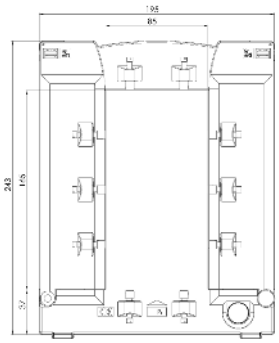

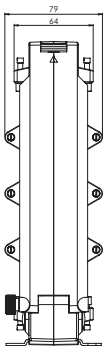

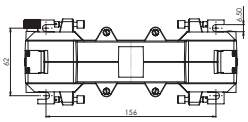

	Output signal / class	
Primary current [A]	333 mV Cl. 1 Art.-no.	333 mV Cl. 0,5 Art.-no.
1000	816-9001	
		816-8001
1200	816-9002	
		816-8002
1500	816-9003	
		816-8003
1600	816-9004	
		816-8004
2000	816-9005	
		816-8005
2500	816-9006	
		816-8006
3000	816-9007	
		816-8007
4000	816-9008	
		816-8008
5000	816-9009	
		816-8009

Low-voltage current transformers for industrial applications

Summation current transformer

KSKSU	Inputs: 2 ... 3 Transformer width: 127 mm	Current range: 1 A or 5 A	Page: 85
KSSUSK	Inputs: 3 ... 8 Transformer width: 156 mm	Current range: 1 A or 5 A	Page: 86

Guidance when ordering summation current transformers

Summation current transformers are suitable for the summation of several synchronized alternating currents with similar phases but with differing load phase shifts. It is also possible to have the summation of currents with varied nominal voltages of similar phase positions. These measurements cannot be used for tariff applications, as the existing voltage differences are recorded as errors.

With the counter connection of the main transformer to the summation current transformer, it is possible to receive secondary currents which are proportional to the differences of the primary input currents.

The built-in technical know-how enables the summation current transformers to add secondary currents of varying nominal transmissions from the main transformer.

The secondary connections of each main transformer are connected to the allocated primary inputs of the summation current transformers.

The number of windings of individual partially wound primary circuits of the summation current transformer is proportionally aligned to the ratio of the primary nominal current of the corresponding main transformer, and to the sum of the nominal currents of all the summation current transformers being connected to the main transformer.

For the visual display of the current, a measuring unit can be used with a measuring range similar to the secondary nominal current of the summation current transformers.

It is irrelevant for the main transformers with similar nominal transmission ratios, to which primary circuit of the summation current transformer the connection is made.

With main transformers of different nominal transmission ratios, care must be taken to adhere to the assigned connection to the terminals of the summation current transformers.
Is the current flow in the main transformer interrupted, the secondary circuit of the main transformer must neither be short-circuited nor be connected to the summation current transformer, or to the main transformer.

Summation current transformers with unallocated primary circuits must remain open for a later connection to an additional main transformer. The secondary output current of the summation current transformer is in this instance lower than the secondary nominal current of the summation current transformer by a quantity equal to the ratio of the primary nominal current of this "missing" main transformer and the sum of all the primary nominal currents of the main transformer.

The nominal secondary current of a main transformer must be equal to the nominal primary current of the input allocation of the summation current transformer.

Guidance when ordering summation current transformers

Please find below an example for the correct selection of measuring components for summation current transformers.

Example:

Actual situation:	3 transmission ratios	1000 / 5 A
		800 / 5 A
		600 / 5 A
	Overall current	2400 / 5 A

Consumers:
– 1 current meter
– 1 power recorder

Looking for: 1 summation current transformer and the VA power of an individual main transformer

Required active performance of the summation current transformer:

Current meter	1.5 VA
Power recorder	7.0 VA
Measurement conductor loss	1.5 VA
Consumption P_0 summation CT	4.0 VA
Interim result	14.0 VA

The individual transformer must provide it's VA share from this 14.0 VA corresponding to its ratio to the "total transmission".

Consideration must also be given to the respective power loss between the main transformer and the summation transformer plus other possible losses.

1. Main transformer 1000 / 5A $\frac{1000}{2400}$ x 14.0 = 5.83 VA + additional possible losses

2. Main transformer 800 / 5A $\frac{800}{2400}$ x 14.0 = 4.67 VA + additional possible losses

3. Main transformer 600 / 5A $\frac{600}{2400}$ x 14.0 = 3.50 VA + additional possible losses

The VA values of the main transformers are to be rounded up to the corresponding VA values in our charts.

The ratio of the primary current of a main transformer to the sum of the primary currents of all main current transformers the ratio must not exceed 1:8.

Important indication to the power measuring

Too many rising deviation can prevent the measuring transformer acting as a current transformer from fulfilling its protective function with regard to the connected measuring units, as in normal operation its functions is well below its saturation limit, and in the event of over currents, the saturation limit is reached considerably later and takes the function almost as a protection current transformer.

If there is too much of a decrease, the measuring transformer, as a result of the continuous excess demands will reach the saturation limit too soon and indirectly function as a switch, rendering a measuring impossible.

KSKSU 2...3

Summation Low-Power CT

		Secondary current / Class
Inputs	Primary current [A]	333 mV Cl. 1 Art.-no.
2	1	113-9001
	5	113-9002
3	1	113-9003
	5	113-9004

Transformer width	127 mm
Height	90 mm
Depth	57 mm

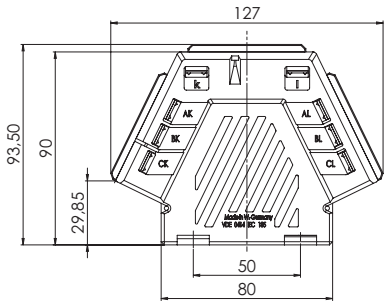

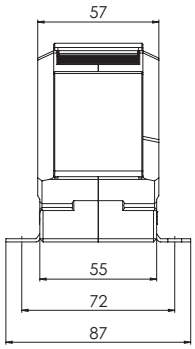

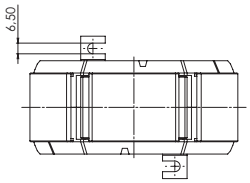

		Art.-no.
	Snap-on mounting	**–**
	Sealed shutter, type B	**59041**

Connection example for different ratios:

AK-AL = 1000/5
BK-BL = 800/5
CK-CL = 600/5

Connection diagram

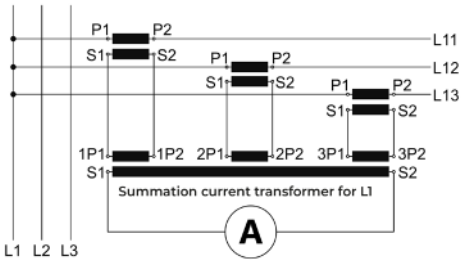

Other output signals like 22.5 mV, 150 mV, 225 mV on demand.
Class 0.5, 0.5s, 0.2, 0.2s on request.

KSSUSK 3...8

Summation Low-Power CT

Transformer width	156 mm
Height	136,5 mm
Depth	65 mm

		Secondary current / Class
Inputs	Primary current [A]	0...333 mV Cl. 1 Art.-no.
3	1	193-9001
	5	193-9002
4	1	193-9003
	5	193-9004
5	1	193-9005
	5	193-9006
6	1	193-9007
	5	193-9008
7	1	193-9009
	5	193-9010
8	1	193-9011
	5	193-9012

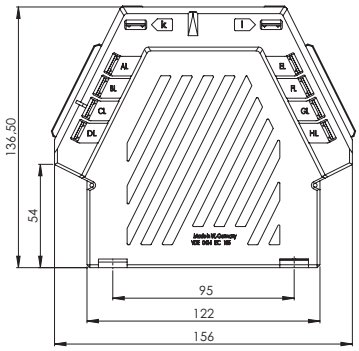

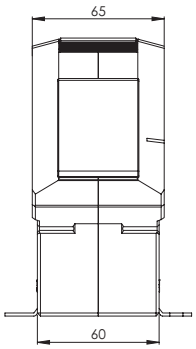

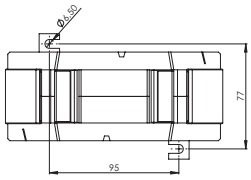

		Art.-no.
	Snap-on mounting	**–**
	Sealed shutter, type B	**59041**
	Sealed shutter, type C	**59042**

Connection diagram

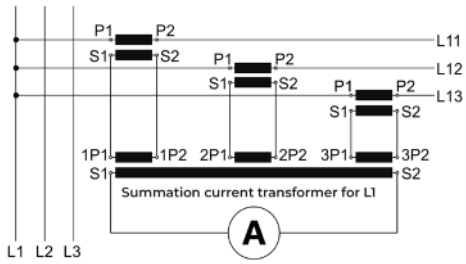

Other output signals like 22.5 mV, 150 mV, 225 mV on demand.
Class 0.5, 0.5s, 0.2, 0.2s on request.

Low-voltage current transformers for industrial applications

Mini current transformers

CTM 7	Round conductor: 7,6 mm Transformer width: 27,5 mm	Current range: 7 ... 25 A	Page: 88

CTM 7

Mini Low-Power CT

Round conductor	7,6 mm
Transformer width	27,5 mm
Height	46,5 mm
Depth	21,5 mm

	Output signal / class	
Primary current [A]	333 mV Cl. 3 Art.-no.	333 mV Cl. 1 Art.-no..
7	77010	
10	77011	
15	77015	
16	77012	
20	77013	
24		77014
25		77016

		Art.-no.
	Snap-on mounting, type J	**55018**
	Sealed shutter	**–**

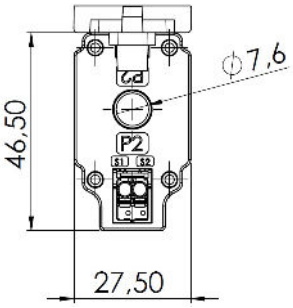

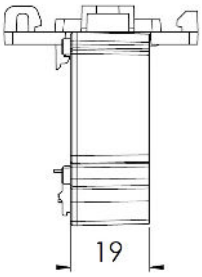

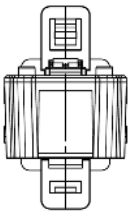

Three-phase current transformer set with innovative connection technology to measuring unit

ASKDS 25	Bus bar 1: 3x 21 x 25 mm Round conductor: 3x 21 mm Transformer width: 110,5 mm	Current range: 3x 60 ... 3x 250 A	Page: 91
ASKDS 33	Bus bar 1: 3x 30 x 29 mm Round conductor: 3x 29 mm Transformer width: 140 mm	Current range: 3x 250 ... 3x 600 A	Page: 91
ASKDS 55	Bus bar 1: 3x 50 x 54 mm Round conductor: 3x 50 mm Transformer width: 215 mm	Current range: 3x 750 ... 3x 1250 A	Page: 91
MPR 3	Multifunctional power meter 72 x 72 mm		Page: 93
MPR 4	Multifunctional power meter 96 x 96 mm		Page: 95

Innovative connection technology to plug three single-phase current transformers to multifunctional power measuring unit

„QUICK CONNECT“

- Quick - simple - efficient - Safe and reliable -

Your advantages when choosing „Quick Connect“

- Considerable reduction of working time because of less wiring and installation work
- Vast saving of labour costs through faster wiring
- Elimination of connection errors due to simple „Plug 'n Play“ technology
- Increased safety and less downtime due to integrated protection circuit, which allows to connect the three single-phase current transformers even when the grid is energized
- Large current range from 60 – 1250 A with only three different types of current transformer
- Two multifunctional power measuring units (72x72 mm & 96x96 mm) to select

„Quick Connect“ – the modular power meter system of MBS How it works:

1. Choose current transformer (three construction types, selectable from 60 A up to 1250 A)
2. Define the needed measuring unit (MPR 3 in size 72x72 mm or MPR 4 in size 96x96 mm)
3. Pick the required cable length (0.3 m – max. 5.0 m; standard: 1 m)
4. Send all information to MBS – and you're done!

You have never set the components for a multifunctional power meter system faster.

Three single-phase current transformers „ASKDS“
with innovative connection technology „Quick Connect“

ASKDS 25

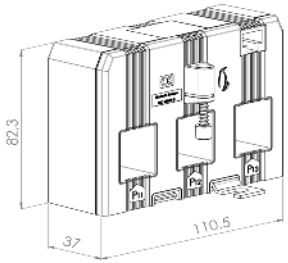

ASKDS 33

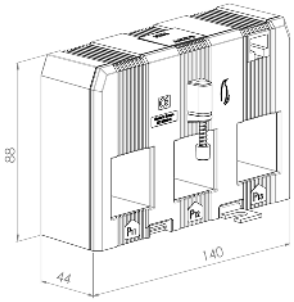

ASKDS 55

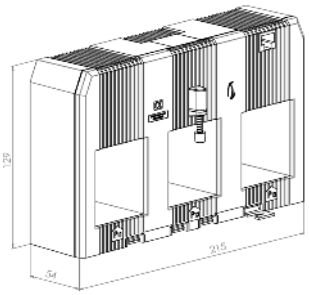

Quick – simple – efficient

- Quicker installation than with three conventional current transformers
- Simpler wiring by 8-pin RJ45-connector, instead of 6 individual wires when using conventional current transformers
- Most efficient set-up of a multifunction power measurement combined with our multifunctional power measuring unit MPR 3 (72x72 mm) or MPR 4 (96x96 mm)

Features / benefits

- Three single-phase current-transformer-set designed for the usage together with our multifunctional power measuring units MPR 3 (72x72 mm) or MPR 4 (96x96 mm)
- Transmission of the measuring signal to the measuring unit using a modified RJ45 bus via a standard-CAT5-patch cable (deliverable in different lengths, max. 5m)
- All current transformers can be operated permanently open, due to a built-in protection circuit
- Three single-phase current transformer-set developed for installation directly

General technical specifications

- Operating temperature: -10°C < T < +50°C
- Storage temperature: -25°C < T < +70°C
- Therm. nominal continuous rated current Icth: 1.0 x IN
- Therm. nominal short-time current Ith: 60 x IN, 1 sec.
- Max. operating voltage Um: 1.2 kV
- Isolation test voltage: 6 kV, Ueff, 50 Hz, 1 min.
- Output limit under overload: ≤ 2 x UAN
- Rated frequency: 50 Hz
- Isolation class: B
- Applicable technical standard: IEC 61869, part 8 in the region of standard circuit breakers

Dimension / Type	ASKDS 25	ASKDS 33	ASKDS 55
Window dimension (wxh)	21 x 15 mm	30.5 x 29.5 mm	50.2 x 54 mm
Distance between phases	35 mm	45 mm	70 mm
Transformer width	110.5 mm	140 mm	215 mm
Transformer height	82.3 mm	88 mm	129 mm
Transformer depth	56 mm	63 mm	73 mm

Dimensions

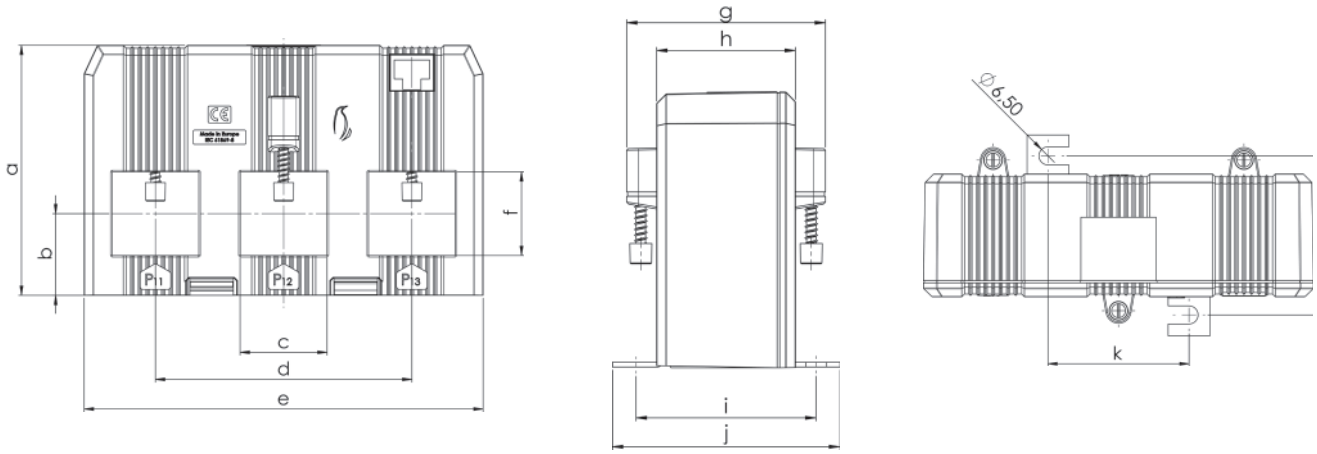

Dimension table

Type / Dim.	a (mm)	b (mm)	c (mm)	d (mm)	e (mm)	f (mm)	g (mm)	h (mm)	i (mm)	j (mm)	k (mm)	l (mm)
ASKDS 25	82.3	28.5	21	70	110.5	25	56	37	57	72	35	57
ASKDS 33	88	28.75	30.5	90	140	29.5	63	44	57	72	50.6	57
ASKDS 55	129	46	50.2	140	215	54	73	54	64	79	112.5	64

Order list "Quick Connect" with ASKDS 25

Art.-No.	Primary current (A)	Meas. unit	RJ45 cable
150-0001	60	MPR3	1 m
150-0002	75	MPR3	1 m
150-0003	100	MPR3	1 m
150-0004	150	MPR3	1 m
150-0005	200	MPR3	1 m
150-0006	250	MPR3	1 m
150-3301	60	MPR4	1 m
150-3302	75	MPR4	1 m
150-3303	100	MPR4	1 m
150-3304	150	MPR4	1 m
150-3305	200	MPR4	1 m
150-3306	250	MPR4	1 m

Accessories:
- Snap-on mounting for mounting on 35mm DIN-rail (Art.-no.: 55020)
- QuickFix for quick and easy fixing on primary conductor (Art.-no.: 3x 55021)
- Further connection cable lengths on request

Order list „Quick Connect" with ASKDS 33

Art.-No.	Primary current (A)	Meas. unit	RJ45 cable
150-0007	250	MPR3	1 m
150-0008	300	MPR3	1 m
150-0009	400	MPR3	1 m
150-0010	500	MPR3	1 m
150-0011	600	MPR3	1 m
150-3307	250	MPR4	1 m
150-3308	300	MPR4	1 m
150-3309	400	MPR4	1 m
150-3310	500	MPR4	1 m
150-3311	600	MPR4	1 m

Accessories:
- Snap-on mounting for mounting on35mm DIN-rail (Art.-no.: 55012)
- QuickFix for quick and easy fixing on primary conductor (Art.-no.: 3x 55021)
- Further connection cable lengths on request

Order list „Quick Connect" with ASKDS 55

Art.-No.	Primary current (A)	Meas. unit	RJ45 cable
150-0012	750	MPR3	1 m
150-0013	800	MPR3	1 m
150-0014	1000	MPR3	1 m
150-0015	1200	MPR3	1 m
150-0016	1250	MPR3	1 m
150-3312	750	MPR4	1 m
150-3313	800	MPR4	1 m
150-3314	1000	MPR4	1 m
150-3315	1200	MPR4	1 m
150-3316	1250	MPR4	1 m

Accessories:
- Snap-on mounting for mounting on 35mm DIN-rail (Art.-no.: 2x 55011)
- QuickFix for quick and easy fixing on primary conductor (Art.-no.: 3x 55021)
- Further connection cable lengths on request

Multifunctional power measuring unit „MPR 3“
with innovative connection technology „Quick Connect“

Features / benefits
- Simpler wiring of the three single-phase current-transformer-set ASKDS via 330 mV voltage output for equivalent primary current from 60 A to 1250 A
- Alternatively the split-core current transformers type KBR 18/32/44 can be connected by means of a RJ45-adaptor
- Replaces a variety of analogue measuring devices, along with significantly less wiring expenses
- Storage of minimum and maximum values allows monitoring and error analysis
- Due to a digital in- and output as well as a pulse output a connection to a power management system is possible
- Additionally the device has a Modbus-RTU interface (RS485)

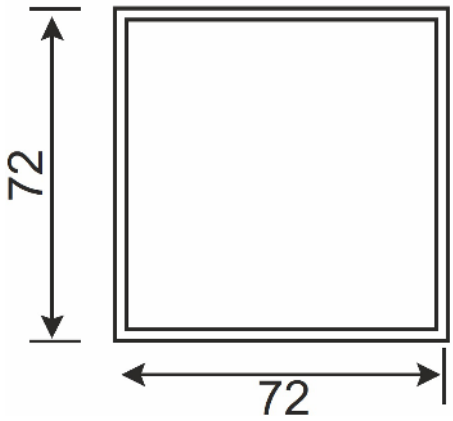

Application
Energy is becoming more and more expensive and is thus a steadily growing cost factor.
In order to detect high-level power consumers, MBS AG has developed the multifunctional measuring unit MPR 3 (72x72 mm) and MPR 4 (96x96 mm) in combination with the three single-phase current-transformer-set ASKDS, which are especially designed for monitoring of 3- or 4-line networks in building technology.
All relevant network data can be measured and displayed

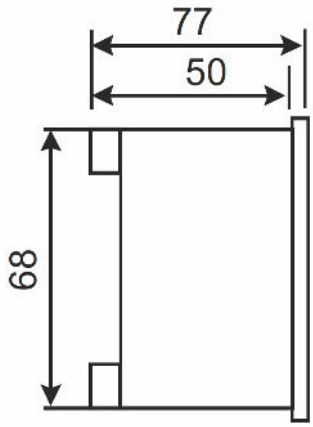

Measurements
The following measurements can be displayed with the multifunctional measuring unit MPR 3:
- The current values for voltage, current, frequency and power factor
- The active power, apparent power and reactive power for each phase and for the whole grid
- The minimum and maximum values for voltage, current, active power, reactive power and power factor for each phase and for the whole grid

Optionally the THD-I and THD-V can be displayed.

Additionally integrated into the device is a 4-quadrant energy meter for the active and reactive energy, two operating hours counters and a rotary field direction display. One of the operating hours counter can be reset manually.

The device is operated by using four buttons and the menu on the display.

All the outputs given above are galvanically isolated from the measurement inputs and the auxiliary voltage.

Order list

Art.-No.	Pulse output	RS485 (Modbus RTU)	Digital input	Digital output	Alarm	Event logs	Outage records	THD-I	THD-V
99-72001	•	•	1x	1x	•	•	•	•	•

Technical parameters

Input	
Input voltage	10-400 V AC L-N (10-690 V AC (L-L) (2.5 mm²)
Input current (U ~ I):	0 – 330 (500) mV via current-transformer-set ASKDS using CAT5 RJ45-cable (alternatively via split-core current transformer type KBR 18/32/44 by means of RJ45-adaptor)
Frequency:	45-65 Hz
Auxiliary supply:	185 – 300 V AC/DC ± 10 % (2,5 mm²)
Power consumption:	< 5 VA
Housing according to DIN / IEC 61 554 (DIN 43 700)	
Dimensions (W x H x D) / Cut-out:	72 x 72 x 50 mm / 68 $^{+0.7\,/\,-0,0}$ x 68 $^{+0.7\,/\,-0,0}$ mm
Weight:	Approx. 230 g
Mounting:	Snap-on mounting for instrument panel thickness ≤ 8 mm
Terminals:	Voltage: Screw terminals Current: 8-pin RJ45-connector
Front panel:	4 control keys
Display:	FSTN LCD-Display with background illumination
Display dimensions (W x H):	2.6“
Environment behaviour	
Operating temperature:	- 10 °C … + 55 °C
Storage temperature:	- 20 °C … + 70 °C
Relative humidity:	Up to 90%, non-condensing
Sea level:	Up to 2000 m
Pollution degree:	2, according to EN 61010-1:2011
Operation conditions	
Electrical safety:	According to EN 61010-1:2011; CAT III 300 V
Protection class according to EN 60529:	IP51 Front panel; IP20 Terminals
Max. voltage to earth:	≤ 400 V
EMC	
Emission:	According to EN 55011 Class A; EN 55022 Class B
Susceptibility:	According to EN 61000-4-2, EN 61000-4-3, EN 61000-4-4
Measuring accuracy	
Current, voltage,	0,5 %
Active-, reactive-, apparent power, active energy	1,0 %
Reactive energy	2,0 %
cos φ	0,2 %
Frequency	0,1 %
Output modules	
Pulse output:	Max. 1 pulse output possible
Impulse time:	20, 40, 60, 80, 100, 150, 200, 300, 400, 500 ms
Switch current (pulse output):	Max. 50 mA
Extern voltage (pulse output):	5 … 48 V
RS485 Modbus-RTU	Max. 1 Modbus module possible (max. ±12 V, 1.5 mm²)
Baud rate (Modbus):	2400, 4800, 9600, 19200, 38400, 57600, 115200
Address / Parity (Modbus):	1 – 247 / Even, Odd, None
Max. communication range (Modbus):	1200 m (by using repeater)
Digital in- / output	1 Input + 1 Output (5 – 30 V DC, 1,5 mm²)
Memory	
Internal memory	1 MB
Password protection	
Setting protected by password:	Available

Multifunctional power measuring unit „MPR 4“

with innovative connection technology „Quick Connect“

Features / benefits

- Simpler wiring of the three single-phase current-transformer-set ASKDS via 330 mV voltage output for equivalent primary current from 60 A to 1250 A
- Alternatively the split-core current transformers type KBR 18/32/44 can be connected using the screw terminals of the measuring device
- Replaces a variety of analogue measuring devices, along with significantly less wiring expenses
- Storage of minimum and maximum values allows monitoring and error analysis
- Due to an integrated Modbus-RTU interface (RS485) a connection to a power management system is possible
- Optionally the device can be equipped with an output module, which has the following outputs: 2x digital input; 2x digital output; 2x analogue output; 2x switching output

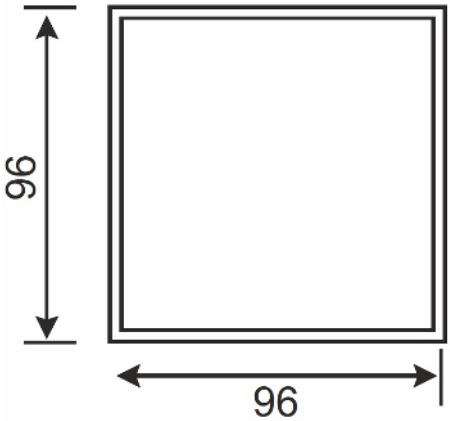

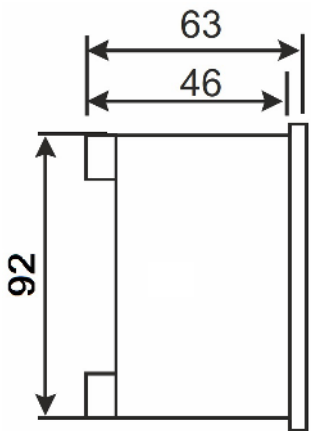

Application

Energy is becoming more and more expensive and is thus a steadily growing cost factor.
In order to detect high-level power consumers, MBS AG has developed the multifunctional measuring unit MPR 3 (72x72 mm) and MPR 4 (96x96 mm) in combination with the three single-phase current-transformer-set ASKDS, which are especially designed for monitoring of 3- or 4-line networks in building technology.
All relevant network data can be measured and displayed.

Measurements

The following measurements can be displayed with the multifunctional measuring unit MPR 4:
- The current values for voltage, current, frequency and power factor
- The active power, apparent power and reactive power for each phase and for the whole grid
- The minimum and maximum values for voltage, current, active power, reactive power and power factor for each phase and for the whole grid

Optionally the THD-I and THD-V can be displayed.

Additionally integrated into the device is a 4-quadrant energy meter for the real and reactive energy, two operating hours counters and a rotary field direction display. One of the operating hours counter can be reset manually.

The device is operated by using five buttons and the menu on the display.

All the outputs given above are galvanically isolated from the measurement
inputs and the auxiliary voltage.

Order list

Art.-No.	RS485 (Modbus RTU)	Available output modules	Alarm	Event logs	Outage records	THD-I	THD-U
99-96003	•	Digital in-/output, Relay output, Analouge output, Pulse output	•	•	•	•	•

Technical parameters

Input	
Input voltage	5-277 V AC L-N (5-480 V AC (L-L) (2.5 mm^2)
Input current (U ~ I):	0 – 330 (500) mV via current-transformer-set ASKDS using CAT5 RJ45-cable (alternatively via split-core current transformer type KBR 18/32/44 by means of RJ45-adaptor))
Frequency:	50-60 Hz
Auxiliary supply:	50 - 270 V AC/DC ± 10 % (2,5 mm^2)
Power consumption:	< 5 VA
Housing	
Dimensions (W x H x D) / Cut-out:	96 x 96 x 46 mm / 92 $^{+0.7 / -0,0}$ x 92 $^{+0.7 / -0,0}$ mm
Weight:	Approx. 340 g
Mounting:	Snap-on mounting for instrument panel thickness ≤ 8 mm
Terminals:	Voltage: Screw terminals Current: 8-pin RJ45-connector
Front panel:	5 control keys
Display:	FSTN LCD-Display with background illumination
Display dimensions (W x H):	3.5“
Environment behaviour	
Operating temperature:	- 5 °C … + 55 °C
Storage temperature:	- 20 °C … + 70 °C
Relative humidity:	Up to 90%, non-condensing
Sea level:	Up to 2000 m
Pollution degree:	2, according to EN 61010-1:2011
Operation conditions	
Electrical safety:	According to EN 61010-1:2011; CAT III 300 V
Protection class according to EN 60529:	IP51 Front panel; IP20 Terminals
Max. voltage to earth:	≤ 277 V
EMC	
Emission:	According to EN 55011 Class A; EN 55022 Class B
Susceptibility:	According to EN 61000-4-2, EN 61000-4-3, EN 61000-4-4
Measuring accuracy	
Current, voltage,	0,5 %
Active-, reactive-, apparent power, active energy	1,0 %
Reactive energy	2,0 %
cos φ	0,2 %
Frequency	0,1 %
Modbus RTU (RS485) interface	
Baud rate (Modbus):	2400, 4800, 9600, 19200, 38400, 57600, 115200
Adress / Parity (Modbus):	1 - 247 / Even, Odd, None
Max. communication range (Modbus):	1200 m (by using repeater)
Optional output module	
Available outputs	2x DO / 2x DI / 2x analogue output / 2x switching output
Memory	
Internal memory	16 MB
Password protection	
Setting protected by password:	Available

Accessories for low-voltage current transformers

Snap-on mountings

Quick Fix

Copper tubes

Mounting angle

Clamping claw + clamp module

Mounting kit

Locking pistons

Secondary cap

Sealed shutter

Copper bus bars

Snap-on mounting

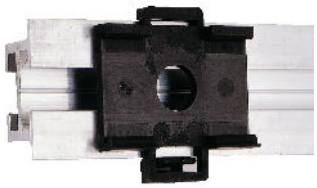

Type	For use with following MBS current transformers	Art.-no.
A	KSR 22.3; KSK 21.3; 31.3; 318.3; 41.3; KSW 30	53011
B	KSK 31.4	54011
C	KSK 31.5, 41.5; KSW 40 N ; KSKDS 55 (2x)	55011
D	KSK 41.4; 412.4; KSW 40 ; KSKDS 33	55012
E	KSR 14.3; 20.3; 201.3, KSAS 176.3, KSK 176.3	55013
F	KSR 21.3; KSK 205.3	55014
G	KSB 31.35, 41.35	55015
H	KBR 18S	55016
I	KSKDS 25	55020

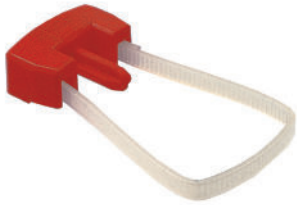

Quick Fix

Quick mounting for KSB	Art.-no.
Standard for 85°C continuous temperature	55021
Cable ties heat stabilized for up to 130°C	55024

Copper tubes

Length	Outside Ø	Inner Ø	Max. current	Art.-no.
34	22,5	16,5	600 A	52011
36	22,5	16,5	600 A	52012
34	22,5	12,5	600 A	52021
36	22,5	12,5	600 A	52022
34	22,5	8,5	600 A	52031
36	22,5	8,5	850 A	52032
32	21	12,5	600 A	52041
34	21	12,5	600 A	52042
32	21	8,5	600 A	52051
34	21	8,5	600 A	52052

further lengths and diameters are available upon request

Mounting angle for 3-phase current transformer set

Mounting angle for triple set (2 pcs.) Plug-in, protection- and tariff current transformers	
For use with following MBS current transformers	Art.-no.
KSK 31.3	59083
KSK 421.4; 41.4; 412.4; KSW 40; KSW 40N	59037
KSK 41.5	59082

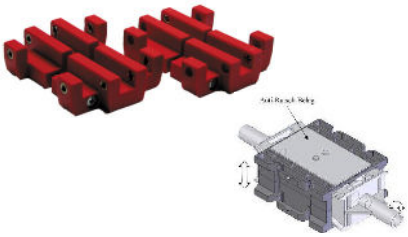

Clamping claw + clamp module

	Art.-no.
Flexible bus bar mounting for CT type KSK 165.5 and KSK 205.5	59090

RJ45 adaptor

	Art.-no
Adaptor for easy connection of three split-core current transformers with measuring output 0...333 mV (KBR 18, 32, 44) to measuring unit MPR 3 / MPR 4	RJ45-A
Konverter QE-485 mit Analogausgang + Modbus RTU	120-00001
Konverter QE-485-H mit Analogausgang + Modbus RTU	120-00002

Mounting kit

Screw M12 x 40	Art.-no
with voltage taps M5	59026
with voltage taps M5 and locking piston for bus bar 30 mm	59027
with voltage taps M5 and locking piston for bus bar 40 mm	59030
with voltage taps M5 and locking piston for bus bar 50 mm	59081
Standard	59028
Standard with locking piston for bus bar 30 mm	59029
Standard with locking piston for bus bar 40 mm	59030A
Standard with locking piston for bus bar 50 mm	59080

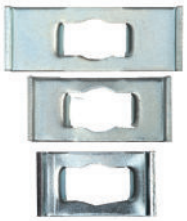

Locking pistons

	Dimensions [mm]			Art.-no
Copper bus bar	30 x 6	30 x 8	30 x 10	59035
Copper bus bar	40 x 6	40 x 8	40 x 10	59036
Copper bus bar	50 x 6	50 x 8	50 x 10	59048

Secondary cap

	Art.-no
Universal secondary cap for MBS current transformers	53016

Sealed shutters

Type	For use with following MBS current transformers	Art.-no
Form A	KSR 22.3, KSK 21.3, 31.3, 318.3, 41.3, 103.3(2x), 123.3(2x), KSW 30	59040
Form B	KSK 31.4, 31.5, 421.4, 41.4, 412.4, KSW 40, KSW 40N, KSKSU, KSSUSK 3...8 primär	59041
Form C	KSK 541.4, 51.4, 561.4, 61.4, 63.4, 63,6, 81.4, 101.4, KSK 105.6, 105.6N, 127.4, 127.6, 128.4, 129.10, KSSUSK 3...8 sekundär	59042
Form G	KSB 31.35; 41.35; KSB	59057
Form H	KSB 51.35; KSB	59058
Form J	KSB 61.35; 81.35; 101.35; KSB	59059

Copper bus bars

galvanically nickel-plated

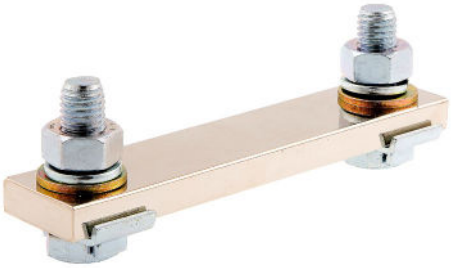

Copper bus bar for current transformers for industrial applications

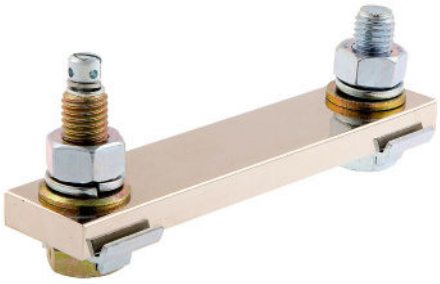

Copper bus bar for current transformers for tariff applications

1

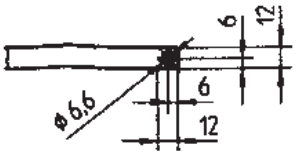

2

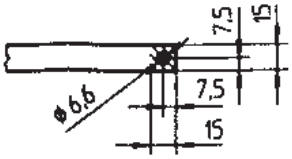

3

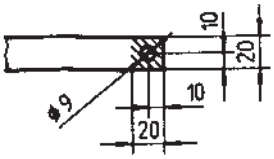

4

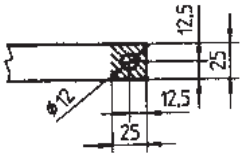

5

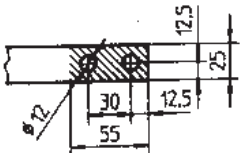

6

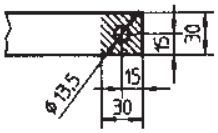

7

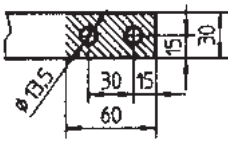

8

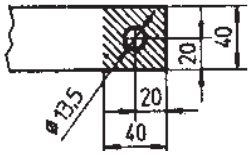

9

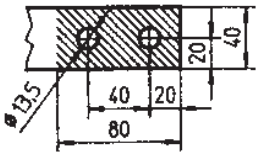

10

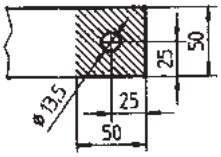

11

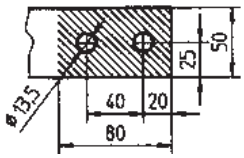

12

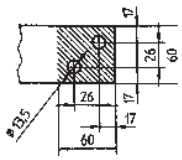

13

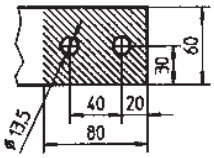

14

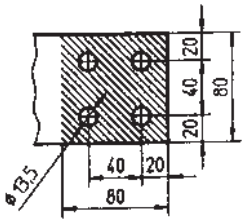

15

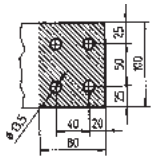

16

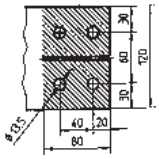

Material E-CU copper plated, acc. to DIN 46433

Copper bus bars

Art.-no.	Configuration	Bores	Length	Width	Thickness	Max. current
030060130B006I	Industry	6	130	30	6	300 A
030060130B006E	energy supplier	6	130	30	6	300 A
030060130B006IO	w/o screws	6	130	30	6	300 A
030060140B006I	Industry	6	140	30	6	300 A
030060140B006E	energy supplier	6	140	30	6	300 A
030060140B006IO	w/o screws	6	140	30	6	300 A
030080130B006I	Industry	6	130	30	8	400 A
030080130B006E	energy supplier	6	130	30	8	400 A
030080130B006IO	w/o screws	6	130	30	8	400 A
030080160B006I	Industry	6	160	30	8	400 A
030080160B006E	energy supplier	6	160	30	8	400 A
030080160B006IO	w/o screws	6	160	30	8	400 A
030100130B006I	Industry	6	130	30	10	750 A
030100130B006E	energy supplier	6	130	30	10	750 A
030100130B006IO	w/o screws	6	130	30	10	750 A
030100140B006I	Industry	6	140	30	10	750 A
030100140B006E	energy supplier	6	140	30	10	750 A
030100140B006IO	w/o screws	6	140	30	10	750 A
030100160B006I	Industry	6	160	30	10	750 A
030100160B006E	energy supplier	6	160	30	10	750 A
030100160B006IO	w/o screws	6	160	30	10	750 A
040060140B008I	Industry	8	140	40	6	500 A
040060140B008E	energy supplier	8	140	40	6	500 A
040060140B008IO	w/o screws	8	140	40	6	500 A
040060160B008I	Industry	8	160	40	6	500 A
040060160B008E	energy supplier	8	160	40	6	500 A
040060160B008IO	w/o screws	8	160	40	6	500 A
040100140B008I	Industry	8	140	40	10	800 A
040100140B008E	energy supplier	8	140	40	10	800 A
040100140B008IO	w/o screws	8	140	40	10	800 A
040100160B008I	Industry	8	160	40	10	800 A
040100160B008E	energy supplier	8	160	40	10	800 A
040100160B008IO	w/o screws	8	160	40	10	800 A
050100140B010I	Industry	10	140	50	10	1000 A
050100140B010E	energy supplier	10	140	50	10	1000 A
050100140B010IO	w/o screws	10	140	50	10	1000 A
050100180B010I	Industry	10	180	50	10	1000 A
050100180B010E	energy supplier	10	180	50	10	1000 A
050100180B010IO	w/o screws	10	180	50	10	1000 A
050100220B011I	Industry	11	220	50	10	1000 A
050100220B011E	energy supplier	11	220	50	10	1000 A
050100220B011IO	w/o screws	11	220	50	10	1000 A
060100180B012I	Industry	12	180	60	10	1200 A
060100180B012E	energy supplier	12	180	60	10	1200 A
060100180B012IO	w/o screws	12	180	60	10	1200 A
060100220B013I	Industry	13	220	60	10	1200 A
060100220B013E	energy supplier	13	220	60	10	1200 A
060100220B013IO	w/o screws	13	220	60	10	1200 A
080100240B014I	Industry	14	240	80	10	1500 A
080100240B014E	energy supplier	14	240	80	10	1500 A
080100240B014IO	w/o screws	14	240	80	10	1500 A
100100240B015I	Industry	15	240	100	10	2000 A
100100240B015E	energy supplier	15	240	100	10	2000 A
100100240B015IO	w/o screws	15	240	100	10	2000 A

Primary bus bars - delivery content:

Energy supplier = with each 1 pc. mounting kit 59026 and 59028

Industry = with 2 pcs. mounting kit 59028

w/o screws = without screws

Further lengths and bores are available upon request

Energie. Zuverlässig. Messen.

MBS AG & Co. KG
Eisbachstraße 51 | 74429 Sulzbach-Laufen
Deutschland

Tel.: +49 07976 / 9851-0
Fax: +49 07976 / 9851-90
info@mbs-ag.com | www.mbs-ag.com

@mbsfirma mbs-ag your.mbsag

MBS IDNR 8.4.0492/12-2025